MITSUBISHI

Type A1S62LS

User's Manual

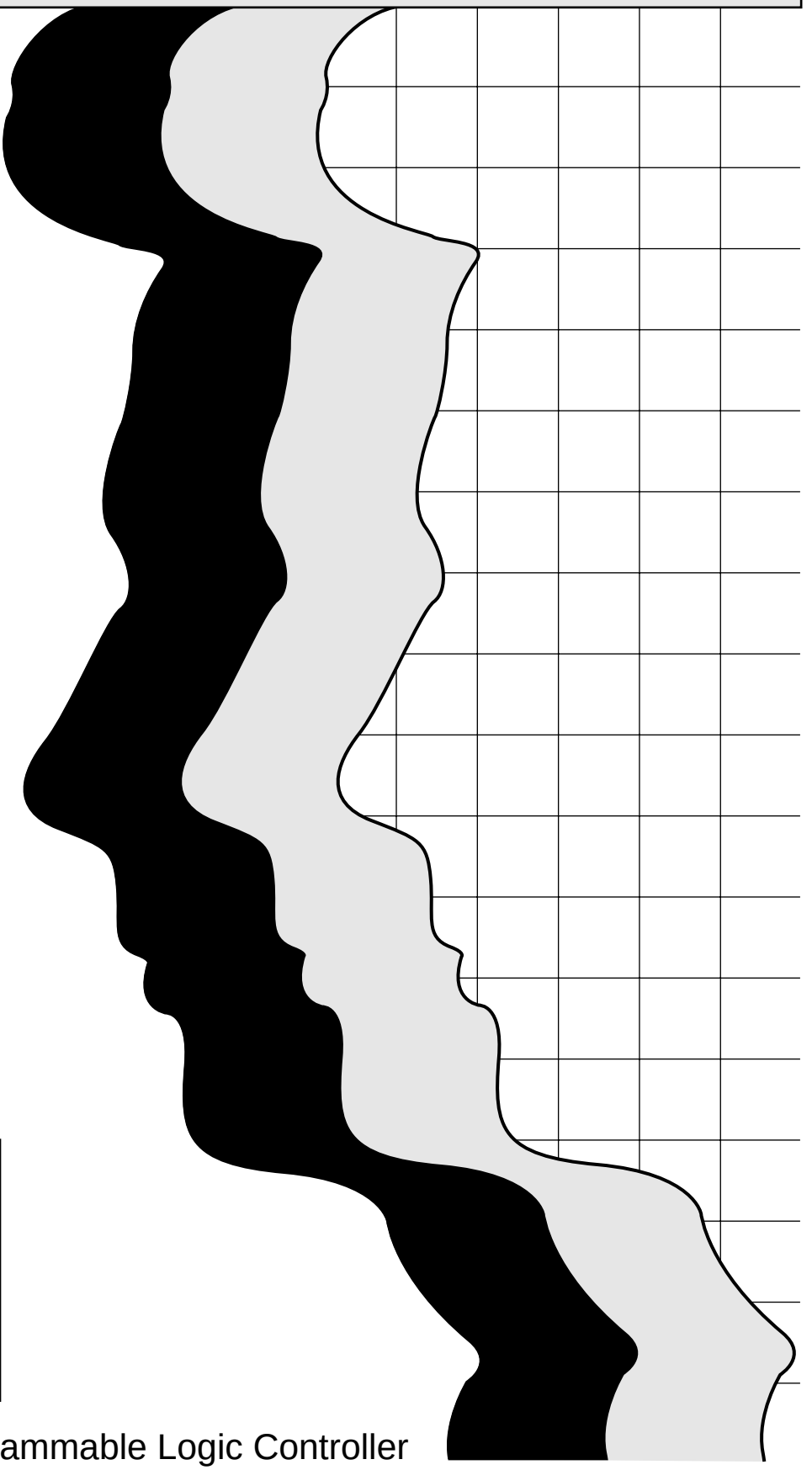

MELSEC

Mitsubishi Programmable Logic Controller

● SAFETY PRECAUTIONS ●

(Please read these precautions before operation.)

When using the A1S62LS, thoroughly read this manual and the associated manuals introduced in this manual. Also pay careful attention to safety and handle the module properly.

These precautions apply only to the A1S62LS. Refer to the CPU module user's manual for a description of the PC system safety precautions.

These ●SAFETY PRECAUTIONS● classify the safety precautions into two categories:"DANGER"and "CAUTION".

⚠ DANGER	Procedures which may lead to a dangerous condition and cause death or serious injury if not carried out properly.
⚠ CAUTION	Procedures which may lead to a dangerous condition and cause superficial to medium injury, or physical damage only, if not carried out properly.

Depending on circumstances, procedures indicated by ⚠CAUTION may also be linked to serious results.

Store this manual in a safe place so that you can read it whenever necessary. necessary. Always forward it to the end user.

⚠CAUTION

[Design Precautions]

(1) Do not bind or close the control cable and the communication cable with the main circuit cable and the power cable. Connect the former cables at least 100 mm away from the latter cables. Failure to do so may cause noise, resulting in malfunction.

⚠ CAUTION

[Installation Precautions]

(1) Use the PC under the environment described in general specifications of the manual.
Failure to do so may result in electrical shock, fire, malfunction, product damage, or deterioration of performance.

(2) Securely insert the module fixing projection at the bottom of the module into the fixed hole of the base unit, then tighten the module fixing screws to the specified torque.
If the module is not tightened and screwed correctly, malfunction, failure or dropping will be caused.
Too tight screws will cause broken screws or module, possibly causing dropping, short circuit or malfunction.

(3) Firmly connect the external I/O connector, external setting unit (VS-T62) connector, and sensor connector to the A1S62LS's connector.
Failure to do so may result in poor contact, leading to incorrect input and output.

⚠ CAUTION

[Wiring Precautions]

(1) Check the terminal arrangement and connect the wires correctly.

(2) Do not allow any foreign matter (e.g. cutting chips, wire strips) to enter the A1S62LS.
This may result in fire, failure, or malfunction.

⚠ DANGER

[Start-up and Maintenance Precautions]

(1) Turn all the phases of the power supply off before cleaning.
If all phases are not shut off, failure or malfunction of the module will be caused.

⚠ CAUTION

[Start-up and Maintenance Precautions]

(1) Do not disassemble, or remodel the unit.
Doing so may result in electrical shock, fire, or A1S62LS malfunction.

(2) Turn all the phases of the power supply off before removing or installing a module.
If all phases are not shut off, failure or malfunction of the module will be caused.

(3) Before touching the module, be sure to touch a grounded metallic part to discharge static charge accumulated on your body.
If the static charge is not discharged, failure or malfunction of the module will be caused.

⚠ CAUTION

[Disposal Precautions]

(1) Be sure to handle the A1S62LS as industrial waste when disposing of it.

REVISIONS

*The manual number is given on the bottom left of the back cover.

Print date	*Manual Number	Revision
May, 1996	IB (NA) 66647-A	First edition
Dec., 2003	IB (NA) 66647-B	Partial Correction SAFETY PRECAUTIONS, Section 2.1, 2.2, 3.6, 3.6.23 Addition Conformation to the EMC Directive and Low Voltage Instruction, WARRANTY

Japanese Manual Version SH-3557-B

INTRODUCTION

Thank you for choosing the Mitsubishi MELSEC-A Series of General Purpose Programmable Controllers. Please read this manual carefully so that the equipment is used to its optimum.
A copy of this manual should be forwarded to the end user.

Conformation to the EMC Directive and Low Voltage Instruction

For details on making Mitsubishi PLC conform to the EMC directive and low voltage instruction when installing it in your product, please see Chapter 3, "EMC Directive and Low Voltage Instruction" of the User's Manual (Hardware) of the PLC CPU to use.

The CE logo is printed on the rating plate on the main body of the PLC that conforms to the EMC directive and low voltage instruction.

By making this product conform to the EMC directive and low voltage instruction, it is not necessary to make those steps individually.

CONTENTS

1. OVERVIEW ..... 1-1 ~ 1-11

1.1 Features 1-5

1.2 Definitions 1-7

2. SYSTEM CONFIGURATION ..... 2-1 ~ 2-3

2.1 Overall Configuration 2-1

2.2 A1S62LS Compatible Systems 2-2

2.3 Function Block Diagram 2-3

3. SPECIFICATIONS ..... 3-1 ~ 3-29

3.1 A1S62LS General Specifications 3-1

3.2 Performance Specifications 3-2

3.2.1 A1S62LS performance specifications 3-2

3.2.2 Absocoder sensor's 'number of divisions', 'resolusion', and 'scale length' 3-3

3.3 Interface Specifications 3-4

3.3.1 External input/output specifications 3-4

3.4 Function List 3-5

3.5 Input/Output Signals Between A1S62LS and PC CPU 3-6

3.5.1 Input/output signal details 3-7

3.6 Buffer Memory 3-14

3.6.1 'Sensor current position' storage area 3-17

3.6.2 'Scaling binary current position' storage area 3-17

3.6.3 Output status storage area 3-17

3.6.4 Program No. answerback storage area 3-17

3.6.5 Manual mode storage area 3-18

3.6.6 Error code storage area 3-18

3.6.7 Limit switch 'output disabled' setting area 3-19

3.6.8 Program No. setting area (for limit SW output function) 3-20

3.6.9 Target stop position setting area (positioning operation) 3-20

3.6.10 Program No. 0 limit switch output ON/OFF data setting area (positioning) 3-21

3.6.11 Speed output storage area 3-23
3.6.12 Hold current position storage area 3-24
3.6.13 FWD/RVS stop zone storage area 3-24
3.6.14 Speed limit setting area 3-24
3.6.15 Positioning pattern data buffer memory selection area 3-25
3.6.16 Medium-speed zone setting area 3-25
3.6.17 Low-speed zone setting area 3-25
3.6.18 FWD/RVS stop zone setting area 3-26
3.6.19 In-position zone setting area 3-26
3.6.20 Preset value for current position preset input 1 and 2 3-26
3.6.21 Sequence mode selection area 3-27
3.6.22 Sequence mode answerback area 3-27
3.6.23 Initial settings and parameters storage/setting area 3-28
3.6.24 A1S62LS No. display data setting area 3-29

4. HANDLING AND WIRING ..... 4-1 ~ 4-5
4.1 Unit Handling Precautions 4-1
4.2 Name of Parts 4-2
4.3 Wiring Precautions 4-4
4.3.1 Wiring precautions 4-4
4.3.2 Precautions when connecting input/output signal lines 4-4
4.3.3 Input/output signal line connections 4-4
4.4 ABSOCODER Sensor Installation Precautions 4-5
4.4.1 Installation of MRE series ABSOCODER sensor 4-5
4.4.2 Precautions when connecting ABSOCODER sensor 4-5

5. CURRENT POSITION DETECTION FUNCTION ..... 5-1 ~ 5-23
5.1 Function Description 5-1
5.1.1 Current position detection function 5-1
5.1.2 Current position 'PRESET' function 5-2
5.2 Pre-Operation Setting Sequence 5-6
5.3 Initial Setting 5-7
5.3.1 Initial setting list 5-7

5.3.2 Sensor selection/sensor rotation direction setting 5-8
5.3.3 Decimal point position setting 5-8
5.3.4 Scale length and minimum current position value setting 5-9
5.3.6 Current position value setting 5-9
5.4 Parameter Settings 5-11
5.4.1 Parameter list 5-11
5.4.2 Function selection 5-12
5.4.3 Permissible current position change amount setting 5-12
5.4.4 Permissible correction amount setting 5-13
5.4.5 Current position preset function setting 5-13
5.4.6 Current position preset value setting 5-13
5.4.7 Speed gate time and speed sampling time setting 5-14
5.5 Programming 5-15
5.5.1 Program creation precautions 5-15
5.5.2 Initial setting and parameter setting data write program 5-17
5.5.3 Program for current position detect display 5-19
5.5.4 Program for error code readout and reset 5-20
5.5.5 Remote I/O station programming 5-20
5.6 Operation 5-23

6. LIMIT SWITCH OUTPUT FUNCTION ..... 6-1 ~ 6-32
6.1 Function Description 6-1
6.1.1 Limit switch output function 6-1
6.1.2 Current position preset function 6-3
6.2 Pre-Operation Setting Sequence 6-4
6.3 Initial Settings 6-5
6.4 Parameter Settings 6-5
6.4.1 Parameter list 6-6
6.4.2 Function selection 6-7
6.4.3 Number of protected channels 6-7
6.4.4 Offline output status setting 6-8
6.4.5 Permissible current position change amount setting 6-8
6.4.6 Permissible correction amount setting 6-8

6.4.7 Current position preset function setting 6-8
6.4.8 Current position preset value setting 6-8
6.4.9 Speed gate time and speed sampling time setting 6-8
6.5 Data Setting 6-8
6.5.1 Data setting 6-9
6.5.2 Data setting for program No. 0....6-11
6.5.3 Writing program Nos.1 - 8 6-12
6.5.4 Reading program Nos. 1 - 8 6-13
6.6 Programming....6-14
6.6.1 Initial setting and parameter setting data write program....6-14
6.6.2 Program for limit switch output function 6-15
6.6.3 Writing program to program Nos. 1 - 8....6-19
6.6.4 Reading program from program Nos.1 - 8....6-21
6.6.5 Program for output status readout 6-23
6.6.6 Remote I/O station programming....6-23
6.7 Operation 6-29
6.7.1 Program switching....6-30
6.7.2 Operation of program No. 0 6-32

7. POSITIONING FUNCTION....7-1 ~ 7-34
7.1 Operation Description....7-1
7.1.1 Unidirectional positioning 7-3
7.1.2 Positioning speed switching format....7-4
7.1.3 Positioning by speed stepping format 7-5
7.1.4 Control timing....7-6
7.1.5 Starting operation from stop zone....7-8
7.1.6 Simple learning function 7-9
7.1.7 JOG operation....7-10
7.1.8 Operation when detection range is exceeded 7-12
7.1.9 Current position presetting during positioning operation....7-15
7.1.10 Operation error....7-16
7.2 Positioning Function Setting and Operation Sequence 7-18
7.3 Initial Settings....7-19

7.4 Parameter Settings 7-19
7.4.1 Parameter list 7-20
7.4.2 Function selection 7-21
7.4.3 Selection of positioning format 7-21
7.4.4 Designation of positioning direction 7-21
7.4.5 Desiganation of overshoot amount 7-22
7.4.6 Designation of medium-speed zone, low-speede zone, stop zone, and In-position zone 7-22
7.4.7 Desiganation of upper and lower limits 7-22
7.4.8 Start from stop zone setting 7-23
7.4.9 Timer settings 7-23
7.5 Programming 7-24
7.5.1 Intial setting and parameter setting data write program 7-24
7.5.2 Program for positioning function 7-24
7.5.3 Program for JOG operation 7-27
7.5.4 Remote I/O station programming 7-28
7.6 Operation 7-34
7.6.1 Basic operation procedure 7-34

8. TROUBLESHOOTING ..... 8-1 ~ 8-12
8.1 Error Code List 8-1
8.2 Troubleshooting Flowchart 8-7
8.3 Flowchart for No Limit SW Output from A1S62LS 8-8
8.4 Flowchart for No Positioning Output from A1S62LS 8-9
8.5 Flowchart when Current Position Preset is Impossible 8-10
8.6 Flowchart when ABSOCODER's Current Position Value doesn't Change 8-11
8.7 Flowchart when Stored Data is Lost, or when Erroneous Data is Stored 8-12

APPENDIX ..... APPX-1 ~ 17
1. ABSOCODER SENSOR SPECIFICATIONS APPX-1
1.1 ABSOCODER Sensor for A1S62LS APPX-1
1.1.1 Specifications APPX-1
1.1.2 Absocoder sensor dimensions APPX-2

1.2 ABSOCODER Cable APPX-3
1.2.1 Specifications APPX-3
1.2.2 Cable length restrictions APPX-3
1.2.3 Absocoder dimensions APPX-4
1.3 External Setting Unit (VS-T62) APPX-5
1.3.1 Specifications APPX-5
1.3.2 External setting unit dimensions (VS-T62: made by NSD) APPX-5
1.3.3 Cable for external setting unit dimensions (VS-C1S62-2) APPX-6
1.4 Contacts for Inquiries and Orders APPX-7
2. DIMENSIONS APPX-8
2.1 A1S62LS Position Detection module APPX-8
3. A1S62LS INPUT/OUTPUT SIGNALS FOR EACH MODE AND BUFFER MEMORY FUNCTION LIST APPX-9
4. A1S62LS DATA SHEET APPX-12
4.1 A1S62LS Initial Setting and Parameter Setting Sheet APPX-12
4.2 A1S62LS Data Sheet APPX-14
4.2.1 A1S62LS data sheet CH. 0 - CH. 3 ..... APPX-14
4.2.2 A1S62LS data sheet CH. 4 - CH. 7 ..... APPX-15
4.2.3 A1S62LS data sheet CH. 8 - CH. 11 ..... APPX-16
4.2.4 A1S62LS data sheet CH. 12 - CH. 15 ..... APPX-17

1. OVERVIEW

This user's manual contains the specifications, and operation/programming procedures for the A1S62LS position detection module which is to be used in conjunction with MELSEC-A Series of small size CPU module.

The A1S62LS incorporates either a rotary position sensor to detect the position of the machine being controlled. The detected position is then compared to the position settings which have been pre-designated, and the necessary ON/OFF and motor control signals are output accordingly.

The A1S62LS is used with The Absocoder sensor (rotary type). ('ABSOCODER' is a registered NSD trademark.)

The ABSOCODER sensor uses a magnetic position detection format, thereby eliminating the need for the mechanical cam switches, proximity switches, and limit switches which other position detection systems require.

This A1S62LS and ABSOCODER combination provides an easy and flexible format for machine control.

The A1S62LS can be used to automatically control the position detection of the conveyor, press machine, assembly machine, packing machine, etc.

The A1S62LS has the same functions as the A62LS-S5 used in conjunction with conventional building block type CPU module. Allocation of I/O and buffer memory is upper compatible with the A62LS-S5.

Points unique to the A1S62LS are as below.

(1) The number of slots is one. (The A62LS-S5 has two slots.)

(2) The setting area is independent.

(3) Reading and writing all of parameter data, including current position settings, is possible using the sequence program.

All desired data can be set by the sequence program, thus installation of an external setting unit is not necessarily required.

(When an external setting unit is necessary, use the VS-T62 made by NSD.)

With its current position value detection, limit switch output and positioning functions (and wealth of auxiliary functions), the A1S62LS is particularly well suited for use as an automatic control system for transport devices, assembly machines, and packaging machines, material handling, press, etc.

The current position value detection, limit switch output and positioning functions are explained briefly on the following pages.

[Current Position Detection Function]

The A1S62LS's current position detection function detects the current position using an ABSOCODER. Conventionally, this was detected using an incremental format encoder in conjunction with a counter unit.

The above conventional method has several disadvantages; the units must be converted when displaying the current position value, origin-point return is necessary when power supply is interrupted due to power failure, etc.

The A1S62LS current position detection function has eliminated these problems by offering a flexible setting format which provides maintenance-free operation.

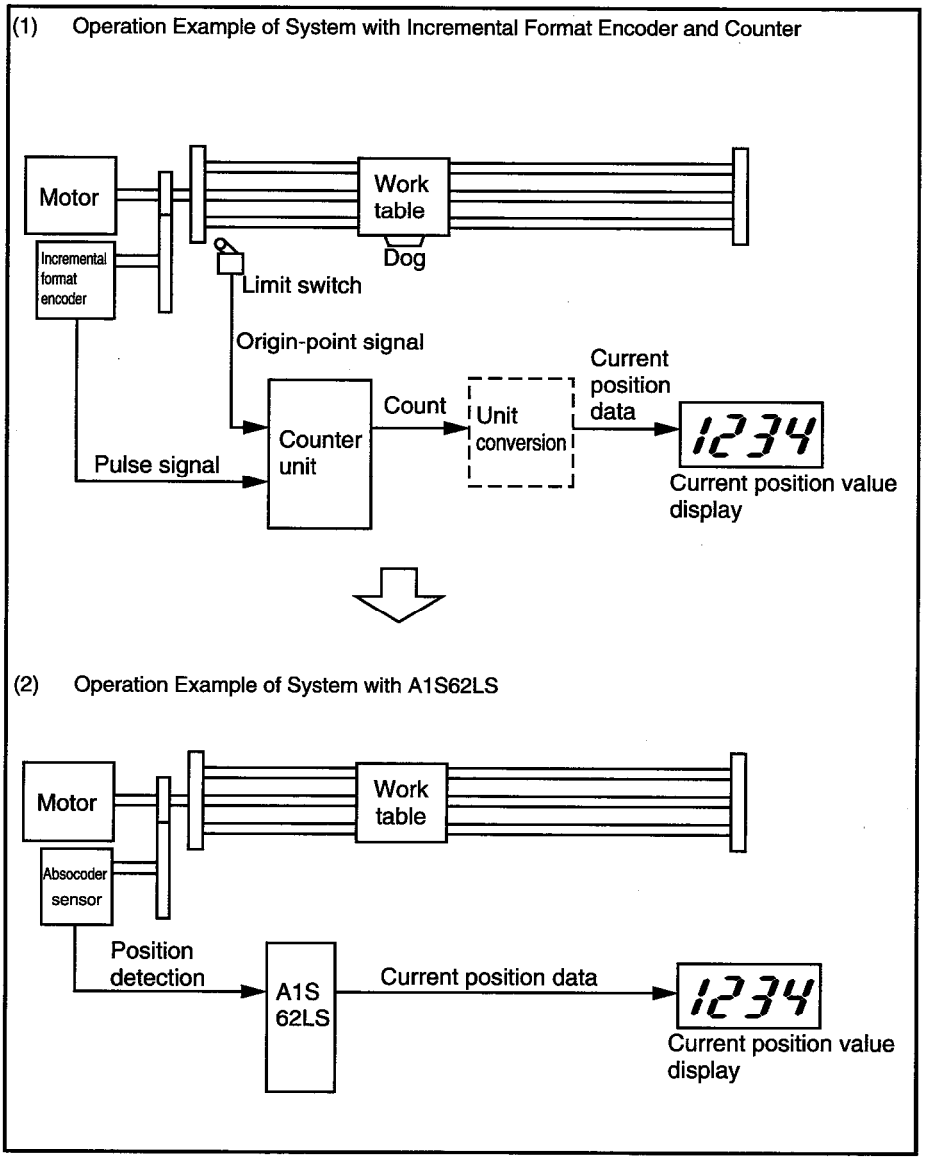

Fig. 1-1 Example of Current Position Detection Function

[LIMIT SWITCH OUTPUT FUNCTION]

The A1S62LS limit switch output function differs from that of other systems in that the limit switch position data is pre-designated at the A1S62LS, without the need for limit switches. The ABSOCODER sensor detects the machine's travel amount and ON/OFF signal outputs occur when the machine's position matches pre-designated positions.

Although limit switches are widely used for position detection, they are troublesome to set, inaccurate, and are not durable.

The A1S62LS limit switch output function has eliminated these problems by offering a flexible setting format which provides high-precision, maintenance-free operation.

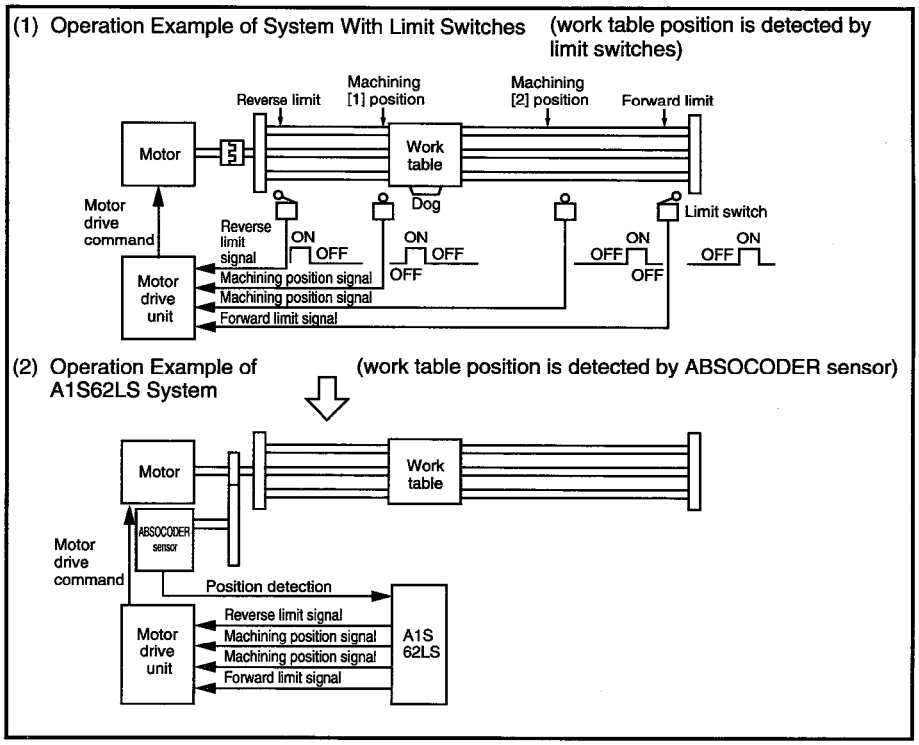

Fig. 1.2 Example of limit switch output function

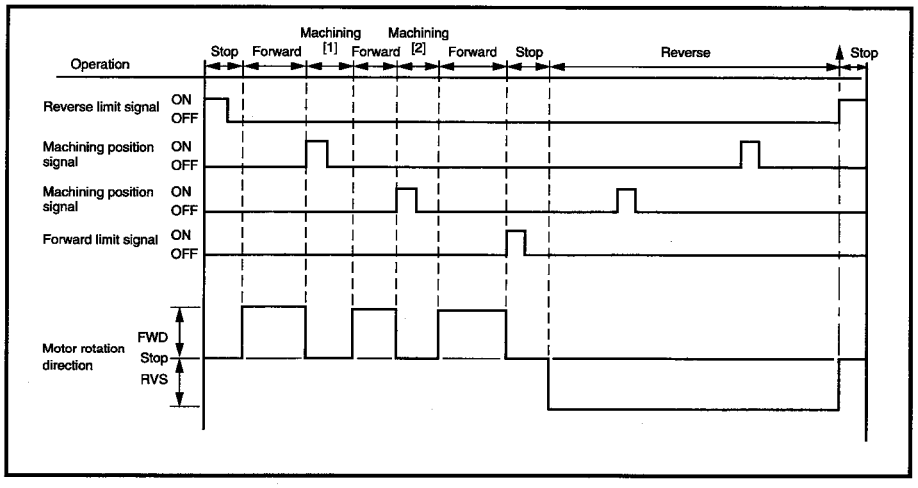

Fig. 1.3 Limit switch output control timing

[POSITIONING FUNCTION]

All positioning data such as the target stop positions and speed switching positions, etc., are pre-designated at the A1S62LS.

The ABSOCODER sensor then detects the machine's travel amount, with the appropriate speed switching or STOP signals being output when the machine's position matches the pre-designated positions. With this positioning function, the following 2 output formats for motor control signals can be used.

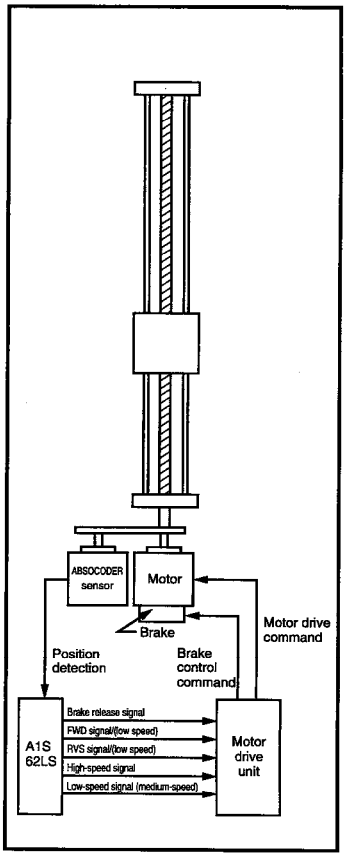

Fig. 1.4 Example of Positioning Function Operation

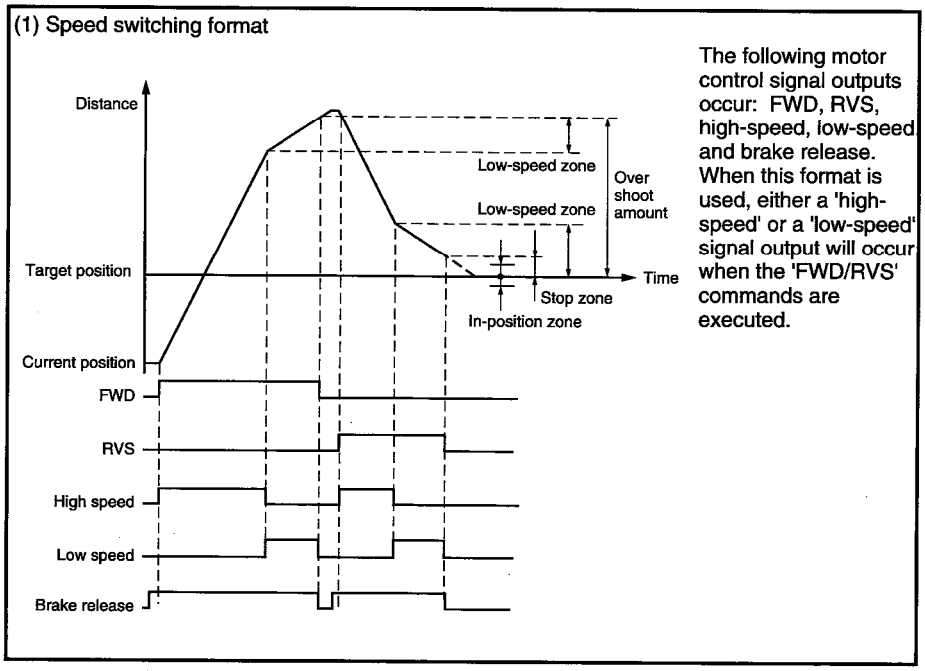

Fig. 1.5 Control timing for speed switching format

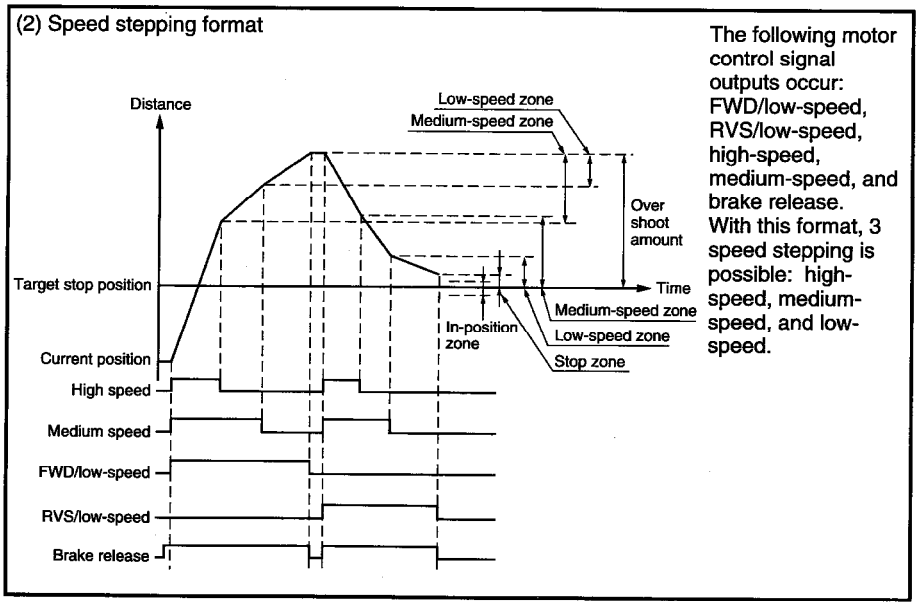

Fig. 1.6 Control timing for speed stepping format

1.1 Features

The A1S62LS has the following features:

(1) Absolute position detection:

Rotational position is detected by an absolute position detection format. Even when a power outage, etc., occurs, the correct address of the ABSOCODER sensor's current position will be instantly detected when power is turned back ON.

(2) High resolution:

The 32-turn rotary-type ABSOCODER sensor (MRE Series) offers a resolution factor of 4096 divisions per 1 turn of the sensor shaft.

The resolution factor for a 64-turn rotary-type ABSOCODER sensor is half the amount given above.

Refer to Appendix 1 for details regarding the relationship between the number of turns and the resolution.

Such high resolution results in high-precision ON/OFF signal outputs and positioning.

(3) High-speed response:

The A1S62LS ON/OFF signal and motor control outputs are not affected by the PC's scan time. These output signals are executed within 2ms after position detection occurs.

(4) Current position preset function:

If a positional discrepancy occurs between the machine's position and the ABSOCODER sensor's position, the current position can be preset to the desired value by external input. The current position can also be preset from the PC via the buffer memory.

(5) Current position hold function:

By detecting the leading edge (OFF → ON) of the current position preset input (external connector), the current position is stored in the buffer memory and held.

(6) Speed detection function:

The sensor's rotation speed is constantly monitored. The detected value (change in position per specified time) is stored in the buffer memory for data communication with the PC CPU as sensor binary or as rpm.

(7) Unidirectional positioning format:

Regardless of the existing positional relationship between the current position and the target stop position, positioning is always executed from the same direction.

If the target stop position lies in the opposite direction, position overshooting will occur, with positioning the being executed from the prescribed direction.

Unidirectional positioning reduces error resulting from backlash, etc.

(8) Joint use of positioning function and limit switch output function:

Output of the designated limit switch output signals is possible while positioning is being executed toward the target stop position.

(9) Two speed control formats:

Either of two speed control formats can be used for the positioning operation:

Speed switching format in which low-speed/high-speed signal switching occurs.

Speed stepping format in which a series of low-speed/medium-speed/high-speed changes occur.

(10) Extension of positioning pattern data:

The desired item of positioning pattern data; medium-speed zone, low-speed zone, stop zone, or In-position zone can be changed via the buffer memory. The stop zone data can be changed separately for forward direction and reverse direction.

(11) Positioning command speed limit function:

Some limitation can be applied to speed command output for positioning via the buffer memory.

(12) Highly accurate positioning by simple learning function:

If a positional discrepancy occurs between the target position and the current position upon completion of positioning, the discrepancy will be automatically corrected when positioning is next carried out.

1.2 Definitions

(1) ABSOCODER

ABSOCODER is the generic name given to the NSD's position sensor which detects rotational/linear displacement, speed, and acceleration, using an absolute position detection format with a digital (or analog) output.

The ABSOCODER sensor consists of two main components: The sensor, where displacement is detected by the change in magnetic resistance, and the converter, where the sensor's output signal (when an AC excitation signal has been applied to the sensor) is converted into absolute data.

The converter for Multi-Turn type ABSOCODER sensor is built-in to the A1S62LS.

(2) UNIDIRECTIONAL POSITIONING

Positioning toward the target stop position is always executed from a single direction. When positioning is required in the opposite direction, the target stop position will be overshot, and positioning will then occur from the prescribed direction (U-turn is made).

The unidirectional positioning format is useful in reducing stop position errors caused by backlash, etc.

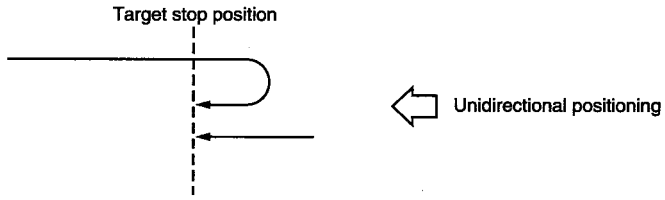

(3) IN-POSITION ZONE

During the positioning operation, there may be a slight discrepancy between the point where positioning ends and the target stop position. At such times, a judgement is required to determine whether the discrepancy is within a permissible limit.

The 'In-position zone' setting is a +/- value to determine 'in position'.

If the positional discrepancy in within the In-position zone, the 'In-Position' signal output will occur.

(4) OVERSHOOT AMOUNT

This refers to the amount by which the target stop position is overshot before a U-turn is made during unidirectional positioning.

(5) PROTECTED CHANNEL (LIMIT SWITCH OUTPUT FUNCTION)

This refers to a switch output channel where the switch output ON/OFF setting cannot be changed during the course of normal operations (operator error).

In order to make setting changes at such a channel, its protected status must be cancelled by designating the 'number of protected channels' setting as '0' in the [PRM] (parameter) mode.

(6) SENSOR SHAFT ROTATION DIRECTION

Depending on the direction in which the ABSOCODER sensor shaft is rotating, the position data value will increase or decrease.

The direction of rotation in which the position data value increases can be designated as either 'CW' or 'CCW' as desired.

For multi-turn type ABSOCODER sensors (MRE Series), the following will apply:

CW setting:

Position data value will increase when the sensor shaft rotates CW (viewed from shaft direction).

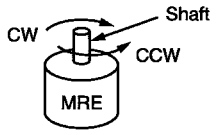

CCW setting:

Position data value will increase when the sensor shaft rotates CCW (viewed from shaft direction).

(7) SCALE LENGTH

This refers to the maximum distance over which the ABSOCODER sensor can execute absolute detection. The scale length can be designated in units which match the machine's travel amount (mm, inches, degrees, etc.).

For multi-turn type ABSOCODER sensors (MRE Series), the scale length will be the machine's travel amount which corresponds to the prescribed number of sensor shaft turns (32, 64, 128, 160, 256, 320).

Example:

When a 32-turn MRE Series sensor is linked to a machine which moves 10 mm per each sensor shaft revolution, and when the minimum setting unit of machine's drive unit is 0.01 mm, the scale length would be as follows:

Actual detection distance = 10 mm/turn × 32 turns = 320 mm

Scale length (L) =

Actual detection distance/Minimum setting unit

Or, L = 320/0.01 = 32000

IMPORTANT

Absolute detection of the current position is possible only within the detection range. If this range is exceeded, the current position value will immediately change by the amount of the entire scale length.

Therefore, it is essential that the machine's travel range not exceed the scale length. (Refer to section 7.1.8 for further details.)

(8) MINIMUM CURRENT POSITION VALUE

This is the minimal value of the scale length which can be displayed. This value can be designated as desired within the following range:

-99999 to [1000000 - scale length].

Example:

Given the same conditions as those described in the 'Scale Length' item above, and with the actual minimum position value of the machine detection range being -10 mm, the following will apply:

Minimum current position value (K) =

actual minimum position value/minimum setting unit

Or, K = -10/0.01 = -1000

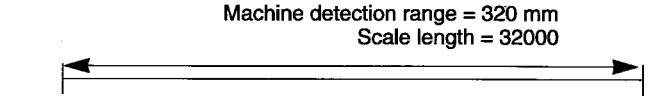

Minimum position value = -10 mm
Minimum current position value = -1000

Maximum position value = 309.99 mm
(Maximum current position value = 30999)

(9) CURRENT POSITION VALUE

This value indicates where the machine is currently positioned within the machine detection range. This can be expressed in two ways: By a sensor binary current position value, or by a scaling binary current position value.

(a) Sensor binary current position value:

With this format, a digital output of '0' will occur (in response to the ABSOCODER sensor's input signal) when the machine is at the 'minimum current position value' position designated at item 8 above. All subsequent machine positions are then output as values relative to that '0' point.

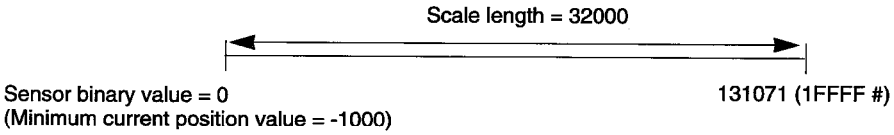

ABSOCODER sensor detection ranges:

0-131071 (0-1FFFF #)

(b) Scaling binary current position value:

With this format, the scaling binary value (indicating the machine's current position) is converted into the appropriate unit (inch/mm) value. The 'minimum current position value' is then added, with the result being expressed as a binary value:

Scaling binary value = Scale length/131072 or 65536

× Sensor binary value + minimum current position value

Example:

With position detection executed by a 32-turn MRE sensor with a scale length of 32000, minimum current position value of -1000, the scaling binary value will be as shown below when the machine's actual position is at the 150 mm point:

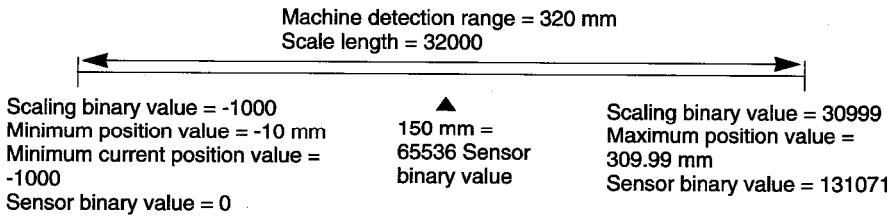

The scaling binary value at the 150 mm position will be as follows:

32000/131072 × 65536 + (-1000) = 15000

(10) STOP ZONE

This is the distance between the target stop position and the point where the motor is switched OFF (and the brake applied) when positioning is being executed. The stop zone can be designated as desired in the PRM (parameter) mode.

(11) BRAKE RELEASE

This is the output signal which releases the brake in positioning systems where the motor is equipped with a brake.

(12) FWD/RVS

For the A1S62LS system, the current position value increases in the FWD (forward) direction and decreases in the RVS (reverse) direction.

(13) SIMPLE LEARNING FUNCTION

If a positional discrepancy occurs between the target position and the current position upon completion of positioning, the discrepancy will be automatically corrected when positioning is next carried out.

MEMO

2. SYSTEM CONFIGURATION

2.1 Overall Configuration

The overall configuration of the MELSEC-AnS Series PC using the A1S62LS is shown below.

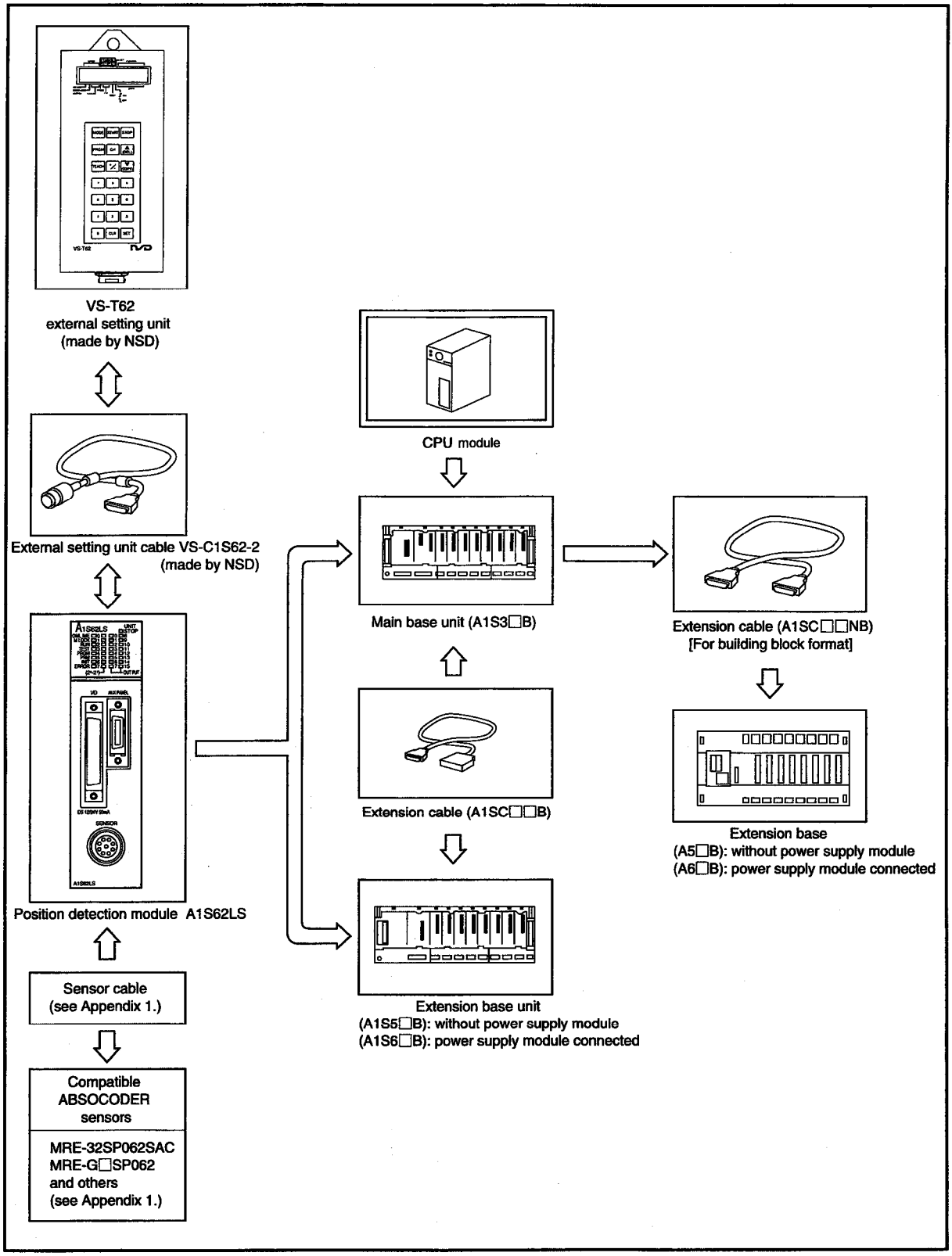

Fig. 2-1 A1S62LS System Configuration

2.2 A1S62LS Compatible Systems

The A1S62LS can be used only in the systems shown below.

This cannot be used for other systems.

(1) The A1S62LS can be used at the following CPU modules:

Compatible models	
A1SJ(H)CPU	A2ASCPU(S1)
A1S(H)CPU	A2US(H)CPU-S1
A2S(H)CPU	Q2AS(H)CPU(-S1)

(2) Except in cases a) and b) below, the A1S62LS can be mounted in any of the base unit's I/O slots.

(a) Unless absolutely necessary, the A1S62LS should not be mounted at an extension base unit which has no power supply module, (Models A1S52B, A55B, A58B), as the electric current capacity may be insufficient.

If mounted at such an extension base unit, the current capacity of the main base unit's power supply module and the voltage drop characteristics of the extension cable should be taken into account when selecting the main base unit and extension cable. (For details, refer to the User's Manual for the CPU module in question.)

(b) In data link systems, the A1S62LS can be installed at the mster station, local station, or remote I/O station.

Remote I/O station compatible CPU modules: A1SJ72T25B

2.3 Function Block Diagram

Fig. 2.2 shows the block diagram of the A1S62LS functions.

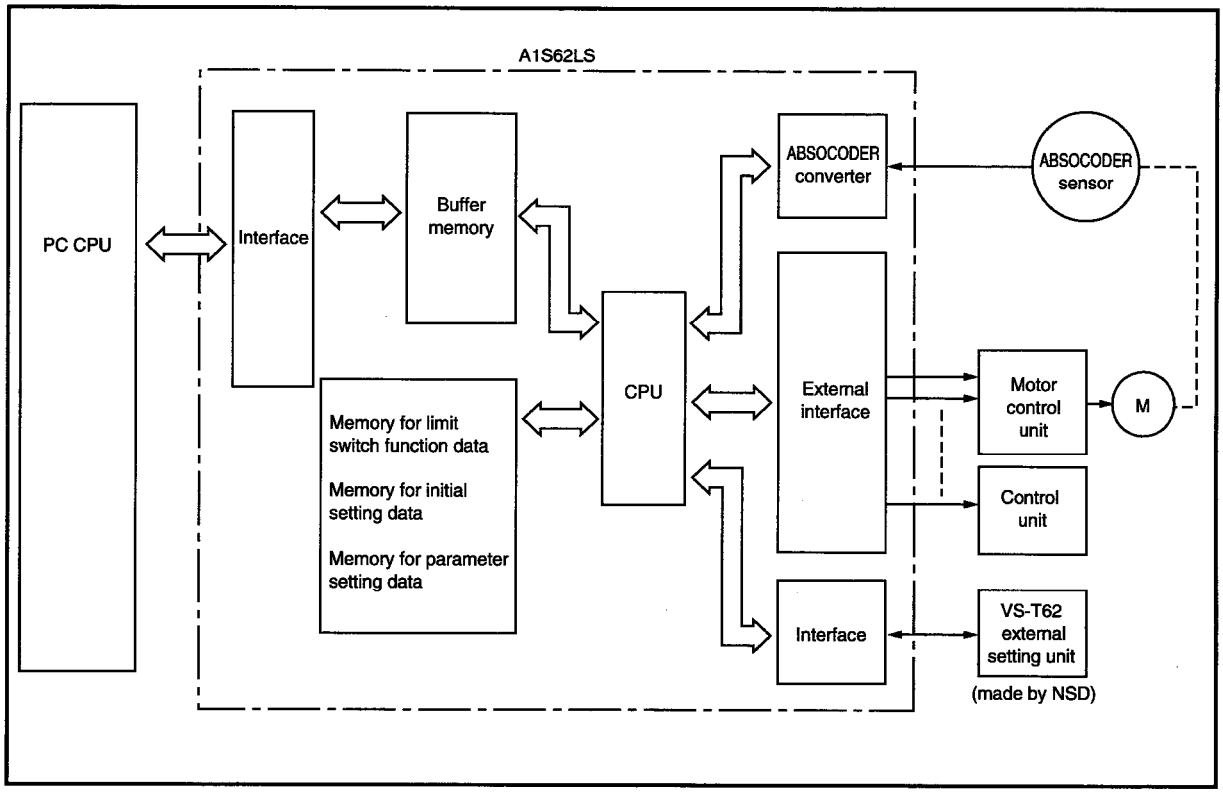

Fig. 2.2 Block Diagram of A1S62LS Functions

MEMO

3. SPECIFICATIONS

3.1 A1S62LS General Specifications

Table 3.1 General Specifications

Item	Specifications				
Operating ambient temperature	0 to +55℃				
Storage ambient temperature	-20 to +75℃				
Operating ambient humidity	10 to 90% RH (non-condensing)				
Storage ambient humidity	10 to 90% RH (non-condensing)				
Vibration resistance	Conforms to JIS C 0911	Frequency	Acceleration	Amplitude	Sweep Count
		10 to 55Hz	———	0.075 mm (0.003 in.)	10 times (1 octave/minute)*
		55 to 150Hz	1G	———	
Shock resistance	Conforms to JIS C 0912 (10G×3 times in 3 directions)				
Noise durability	Tested by noise simulator of 1500 Vpp noise voltage, 1 μs noise width, and 25 to 60 Hz noise frequency.				
Withstand voltage	500VAC for 1 minute, across DC external terminals and ground				
Insulation resistance	5M Ω or more, measured by 500VDC insulation resistance tester across AC external terminals and ground				
Operating ambience	Free of corrosive gases. Dust should be minimal.				
Cooling method	Self-cooling				

REMARKS

1 octave marked with an asterisk (*) indicates a change from the initial frequency to double or half frequency.

For example, any of the following changes are referred to as 1 octave: 10 Hz→20Hz, 20Hz→40Hz, 40Hz→20Hz, 20Hz→10Hz.

Note: JIS stands for Japanese Industrial Standard

3.2 Performance Specifications

3.2.1 A1S62LS performance specifications

Table 3.2 shows the A1S62LS performance specifications.

Table 3.2 Performance Specifications

<table>
<tr><th colspan="3">Item</th><th colspan="2">Specifications</th><th>Remarks</th></tr>
<tr><td colspan="3">Number of position detection axis</td><td colspan="2">1</td><td></td></tr>
<tr><td colspan="3">Position detection format</td><td colspan="2">Absolute position detection by ABSOCODER sensor</td><td></td></tr>
<tr><td colspan="3">Number of divisions</td><td colspan="2">[4096 divisions x 32 turn] to [409.6 divisions x 320 turns]</td><td>See Appendix 1 for resolutions of each ABSOCODER model.</td></tr>
<tr><td rowspan="5">Limit switch output function</td><td rowspan="2">Number of programs</td><td rowspan="2">9</td><td>Program No. 0</td><td>Data is not held when power is OFF.</td></tr>
<tr><td>Program No. 1 - 8</td><td>Data is held when power is OFF.</td></tr>
<tr><td>Number of multi-dogs (dog/CH.)</td><td colspan="2">10</td><td></td></tr>
<tr><td>Number of output channels (CH.)</td><td colspan="2">- For limit SW output function only: 16/1 program
- For limit SW output and Positioning functions: 8/1 pro.</td><td></td></tr>
<tr><td>Data setting method</td><td colspan="2"><table><tr><th>Setting Value / Setting Method</th><th>Function Setting Parameter</th><th>Multi-Dog</th><th>Program No.</th><th>Limit SW Output Enabled</th></tr><tr><td>Sequence program</td><td>○</td><td>○</td><td>○</td><td>○</td></tr><tr><td>Key input at VS-T62</td><td>○</td><td>○</td><td>○*</td><td></td></tr></table>*Possible only in PROGRAM mode</td><td></td></tr>
<tr><td rowspan="5">Positioning function</td><td>Control format</td><td colspan="2">Unidirectional positioning</td><td>Bidirectional positioning when 'overshoot amount' is set to '0'.</td></tr>
<tr><td>Target position setting method</td><td colspan="2">1-point setting prior to positioning operation (sequence program setting, or key input setting at VS-T62)</td><td></td></tr>
<tr><td>Max. number of positioning points</td><td colspan="2">1</td><td></td></tr>
<tr><td>Number of registered positioning pattern data</td><td colspan="2">2</td><td>Pattern is according to parameter setting or buffer memory.</td></tr>
<tr><td>Number of output channels for positioning signal output (CH.)</td><td colspan="2">8</td><td>Signals: FWD, RVS, high-speed, low-speed, brake release, in-position, positioning in progress, operation error.</td></tr>
<tr><td>Data setting method</td><td colspan="2"><table><tr><th>Setting Value / Setting Method</th><th>Initial Setting/ Parameter</th><th>Target Stop Position</th></tr><tr><td>Sequence program</td><td>○</td><td>○</td></tr><tr><td>Key input at VS-T62</td><td>○</td><td>○ (Possible only in PROGRAM mode)</td></tr></table></td><td></td></tr>
<tr><td colspan="3">Minimum position setting units</td><td colspan="2">0.00001</td><td></td></tr>
<tr><td colspan="3">Current position value setting function</td><td colspan="2">Current position value setting, Current position value presett setting</td><td></td></tr>
<tr><td colspan="3">JOG operation function</td><td colspan="2">JOG operation executed by JOG FWD/RVS signal inputs</td><td></td></tr>
<tr><td colspan="3">Sampling time (msec)</td><td colspan="2">1</td><td></td></tr>
<tr><td rowspan="2">Response time (msec)</td><td>Limit SW output signal & positioning output signal</td><td rowspan="2">2</td><td rowspan="2">Max. response delay time due to internal processing</td></tr>
<tr><td>Current position value output</td></tr>
<tr><td rowspan="2">Gate time (msec)</td><td>Speed output</td><td>Conforms to settings of parameters 4, 8, 16, 32, and 64</td><td rowspan="2">Sampling time can be set by parameter.</td></tr>
<tr><td>Rotation speed output</td><td>117</td></tr>
<tr><td colspan="3">Number of I/O signals</td><td colspan="2">32</td><td>Special function unit 32 points</td></tr>
<tr><td colspan="3" rowspan="2">Internal power consumption (5VDC) [A]</td><td colspan="2">0.55 (VS-T62 not connected)</td><td></td></tr>
<tr><td colspan="2">1.0 (VS-T62 connected)</td><td>Includes current consumed by the VS-T62.</td></tr>
<tr><td colspan="3">Outer dimensions mm (in.)</td><td colspan="2">130 (H) x 34 (W) x 93 (D) (5.12 x 1.34 x 3.66)</td><td></td></tr>
<tr><td colspan="3">Mass kg (lb)</td><td colspan="2">0.5 (1.1)</td><td></td></tr>
</table>

3.2.2 Absocoder sensor's 'number of divitions', 'resolusion', and 'scale length'

(1) Multi-turn type ABSOCODER sensor:

Table 3.3 Performance Specifications

Model Name	MRE-32SP062SAC	MRE-G ① SP062FAC				
		①=64	①=128	①=160	①=256	①=320
Number of divisions per revolution	4,096	2,048	1,024	819.2	512	409.6
Number of revolutions	32	64	128	160	256	320
Max. number of divisions	131,072					
Scale length	Refer to section 1.2, item (7). $\frac{\text{Travel amount per turn}}{\text{Drive unit's resolution}} \times \text{Number of revolutions}$					

IMPORTANT

An ABSOCODER sensor should be selected which has a scale length (distance over which absolute position detection is possible) range which exceeds the machine's travel amount.

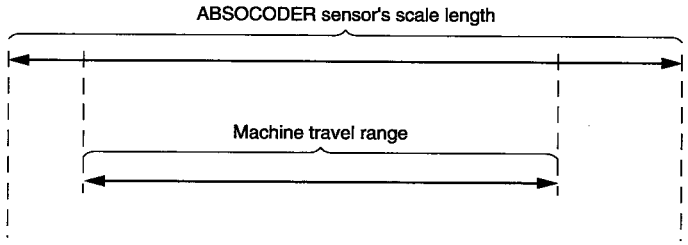

3.3 Interface Specifications

3.3.1 External input/output specifications

This section describes the external input/output interface specifications.

Table 3.4 External Input/Output Specifications

Input Signals				Output Signals		
Item		Specifications		Item		Specifications
Number of input points		Current position value preset input: 2		Number of output points	For current position detection function	No output
					For limit SW output function	Limit SW output: 16
					For limit SW output and Positioning functions	Limit SW output: 8 Positioning signal output: 8
Isolation method		Photo-coupler		Isolation method	Photo-coupler	
Rated input voltage		12 VDC	24 VDC	Rated load voltage	12/24VDC	
Rated input current		4 mA	10 mA	Operating load voltage range	10.2 - 30VDC	
Operating input voltage range		10.2 - 30 VDC		Max. load current	50 mA	
ON voltage		10VDC or more		Max. rush current	0.4 A (10 msec or less)	
OFF voltage		4VDC or less		Current leakage when OFF	0.1 mA or less	
				Max. voltage drop when ON	1.0 V (at 50 mA)	
Response time	OFF→ON	0.04 msec (with input voltage of 24V)		Response time	OFF→ON	1 msec (when load current is 50 mA)
	ON→OFF	0.2 msec (with input voltage of 24V)			ON→OFF	1 msec (when load current is 50 mA)
Common connections		1 common for 2 points (common terminal: B1, B2)		Common connections	1 common for 16 points (common terminal: A1, A2)	
External cable connection format		24 pins connector				
Compatible wire size		0.3 mm²				

External Connections

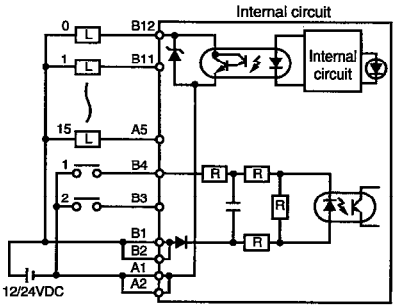

Pin arrangement

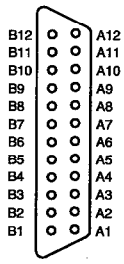

When viewed from the front of the unit

Note 1
One solder type connector jack made by Fujitsu is provided for the A1S62LS.
Code: FCN-361J024-AU (connector)
: FCN-360C024-B (cover)

Note 2
Do not connect any cord to pin Nos. A3 and A4 and spare pins.

Pin No.	For current position detection function	Signal Name		
		For Limit SW Output	For Positioning	
			Using 'speed switching' format	Using 'speed stepping' format
B12	Not used	CH.0	CH.0	CH.0
B11	Not used	CH.1	CH.1	CH.1
B10	Not used	CH.2	CH.2	CH.2
B9	Not used	CH.3	CH.3	CH.3
B8	Not used	CH.4	CH.4	CH.4
B7	Not used	CH.5	CH.5	CH.5
B6	Not used	CH.6	CH.6	CH.6
B5	Not used	CH.7	CH.7	CH.7
A12	Not used	CH.8	FWD	FWD/low-speed
A11	Not used	CH.9	RVS	RVS/low-speed
A10	Not used	CH.10	High-speed	High-speed
A9	Not used	CH.11	Low-speed	Medium-speed
A8	Not used	CH.12	Brake release	Brake release
A7	Not used	CH.13	In-position	In-position
A6	Not used	CH.14	Positioning in progress	Positioning in progress
A5	Not used	CH.15	Operation error	Operation error
B4	Current position preset input 1	Current position preset input 1	Current position preset input 1	Current position preset input 1
B3	Current position preset input 2	Current position preset input 2	Current position preset input 2	Current position preset input 2
B1, B2	12/24VDC	12/24VDC	12/24VDC	12/24VDC
A1, A2	0V	0V	0V	0V

3.4 Function List

As shown in table 3.5, the A1S62LS functions are divided into 2 groups consisting of 'main functions' and 'auxiliary functions'. The main functions are used by the A1S62LS for actual system control, and the auxiliary functions are used to support the main function operations.

Table 3.5 Function List

Function		Description	Reference
Main Functions	Current position detection function	The machine position is detected by the ABSOCODER sensor.	Section 5.1
	Limit switch output function	The machine position which has been detected by the ABSOCODER sensor is compared to the pre-designated limit switch position, with ON/OFF signal outputs being executed accordingly.	Section 6.1
	Positioning function	The machine position which has been detected by the ABSOCODER sensor is compared to the pre-designated target stop position, with motor control signals being output accordingly until the machine has been positioned at the target stop position.	Section 7.1
Auxiliary Functions	Current position preset function	When a misalignment occurs between the machine's actual position and the designated current position value, this function is used to execute an external signal input which automatically corrects the machine's position according to a preset position value.	Section 5.1.2
	Current position hold function	This function is used to store the current position value in the buffer memory by detecting the leading edge of current position preset input 1 or 2 signal. (Response delay: max. 4 msec)	———
	'Excessive current position change' detection function	Position detection is executed by the ABSOCODER sensor every 20ms, and the difference between the previously detected current position value and the present value is computed. The 'excessive current position change' detection function is used to determine whether this difference is within the permissible range prescribed by the parameter setting. If the permissible range is exceeded, the following error will occur: (1) 'Excessive current position change' signal (X (n) 6) turns ON. (2) Error code '24' is stored at the error code area (Address: 7).	Section 5.4.3
	'Excessive correction amount' detection function	When the 'current position preset' signal input occurs, the difference between the machine's current position (which is to be corrected) and the preset position value is computed. This function detects that difference to determine whether it is within the permissible current position change amount designated by the parameter setting. If the permissible range is exceeded, the following error will occur: (1) 'Excessive correction amount' signal (X (n) 5) turns ON. (2) Error code '23' is stored at the error code area (Address: 7).	Section 5.4.4
	'Upper limit overtravel' detection function	This function detects the current position detected by the ABSOCODER sensor to determine whether it has exceeded the upper limit value (upper limit of travel range) which has been designated by the parameter setting. If the upper limit has been exceeded, the following error will occur: (1) Upper limit signal (X (n) 2) turns ON. (2) Error code '20' is stored at the error code area (Address: 7).	———
	'Lower limit overtravel' detection function	This function detects the current position detected by the ABSOCODER sensor to determine whether it has exceeded the lower limit value (lower limit of travel range) which has been designated by the parameter setting. If the lower limit has been exceeded, the following error will occur: (1) Lower limit signal (X (n) 3) turns ON. (2) Error code '21' is stored at the error code area (Address: 7).	———
	Protected channel function	This 'protected channel' function is used to prevent the setting data which designates the limit switch output ON/OFF positions from being accidentally changes during the course of normal operation. The protected channel function can be cancelled by setting the 'number of protected channels' parameter to '0'. Data setting, change, and deletion will then be possible in the same manner for all channels.	———
	Speed detection function	This function is used to output rotation speed (rpm) to the buffer memory based on the current position detected by the ABSOCODER sensor.	———
	Simple learning function	This function is used to enhance positioning accuracy by automatically correcting the stop zone according to the discrepancy between the target stop position and the current position upon completion of the previous positioning.	Section 1.2

3.5 Input/Output Signals Between A1S62LS and PC CPU

Below shows the input and output signals to the PC CPU .

(1) Data communication between the A1S62LS and PC CPU is executed according to the following format:

Input: 16 points Output: 16 points

(2) In the table below, the input/output signals are classified as follows:

(a) Device X: Input signals from A1S62LS to PC CPU.

(b) Device Y: Output signals from PC CPU to A1S62LS.

(3) Table 3.6 below illustrates the signal input/output configuration when the A1S62LS is installed at the base unit's No. 0 slots.

Table 3.6 Input/Output Signals

Signal Direction: A1S62LS→ PC CPU					Signal Direction: PC CPU → A1S62LS	
Device No.	Signal Name				Device No.	Signal Name
X0	Watchdog timer error (A1S62LS detection item)				Y0 ⟆ YC	Use prohibited
X1	A1S62LS operation status (online/offline)					
X2	'Upper limit overtravel' detection					
X3	'Lower limit overtravel' detection					
X4	Sensor error detection					
X5	'Excessive correction amount' detection					
X6	'Excessive current position change' detection					
X7	Error detection					
X8	For limit SW output function only	Channel 0	For joint use of limit SW output and positioning functions	Channel 8 (FWD or FWD/low-speed)		
X9		Channel 1		Channel 9 (RVS or RVS/low-speed)		
XA		Channel 2		Channel 10 (High-speed)		
XB		Channel 3		Channel 11 (Low-speed or medium -speed)		
XC		Channel 4		Channel 12 (Brake release)		
XD		Channel 5		Channel 13 (In-position)	YD ⟆ YF	Used when A1S62LS is at the remote station, with date link executed by RFRP, RTOP instructions.
XE		Channel 6		Channel 14 (Positioning in progress)		
XF		Channel 7		Channel 15 (Operation error)		
X10 ⟆ X1C					Y10	PC ready
					Y11	Positioning START (leading edge detection)
					Y12	Positioning STOP (leading edge direction)
					Y13	FWD (forward) JOG (operation occurs when ON)
					Y14	RVS (reverse) JOG (operation occurs when ON)
					Y15	Limit SW output enabled
					Y16	Error reset
					Y17	Current position preset 1 disabled/Current position preset command (leading edge detection)
					Y18	Current position preset 2 disabled
					Y19	Mode lock
X1D ⟆ X1F	- Used only when A1S62LS is used at remote I/O station. - Signal for RFRP, RTOP instruction interlock.				Y1A ⟆ Y1F	Use prohibited

IMPORTANT

A1S62LS operation cannot be guaranteed if ON/OFF switching of Y0 - C and Y1A - Y1F is executed by the sequence program.

When 'Current position preset' for the sequence format is active by parameter setting, Y17 serves as 'Current position preset command (leading edge detection)'.

3.5.1 Input/output signal details

The ON/OFF timing and other conditions for signal input/output between the A1S62LS and PC CPU are explained below.

(1) Watchdog Timer Error (X0)

This signal comes ON when a watchdog timer error is detected by the A1S62LS's self-diagnosis function.

At this time, all external outputs from the A1S62LS (Channels 0-15) are switched OFF. When 'X0' comes ON, this indicates an A1S62LS hardware error.

(2) A1S62LS Operation Error (Online/Offline) (X1):

If the 'PC ready' signal (Y10) is turned ON by the sequence program when in the RUN mode, the A1S62LS will be set to an 'online' status, and 'X1' will turn ON.

'X1' will go OFF when 'Y10' is turned OFF.

Furthermore, if an attempt is made to designate a mode other than RUN when the A1S62LS is online, the A1S62LS will be switched to an offline status and 'X1' will go OFF.

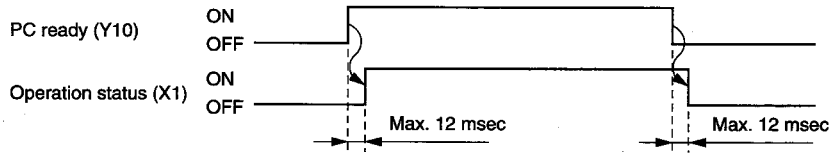

(3) Upper Limit Overtravel Detection (X2):

This signal turns ON when the current position exceeds the upper limit value designated by the parameter setting. When this occurs, the A1S62LS external outputs will continue, and the A1S62LS operation will not be affected. Upper limit overtravel is detected only during an 'online' status. 'X2' will go OFF after the current position has been corrected within the prescribed range and 'Y16' (error reset signal) has been turned ON by the sequence program.

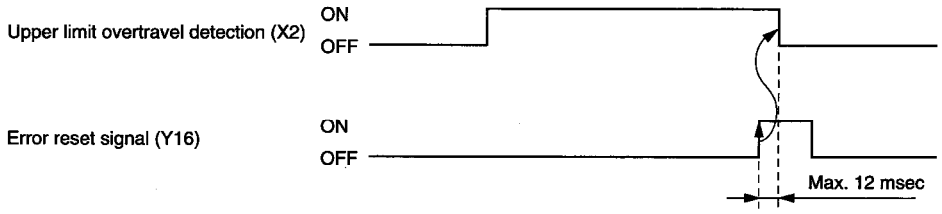

(4) Lower Limit Overtravel Detection (X3):

This signal turns ON when the current position value falls below the lower limit value designated by the parameter setting. When this occurs, the A1S62LS external output signals will continue, and the A1S62LS operation will not be affected. Lower limit overtravel is detected only during an 'online' status. 'X3' will go OFF after the current position has been corrected within the prescribed range and 'Y16' (error reset signal) has been turned ON by the sequence program.

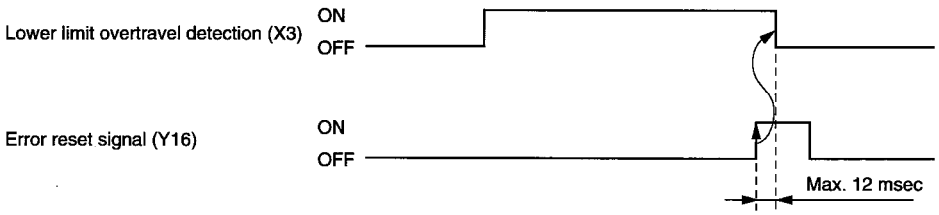

(5) Sensor Error (X4):

This signal turns ON when an error occurs in the ABSOCODER's position detection system, due to a disconnected sensor cable, etc.

When this occurs, all A1S62LS external outputs except the 'operation error' signal will go OFF. After the problem has been corrected, 'X4' will go OFF when 'Y16' (error reset signal) is turned ON by the sequence program.

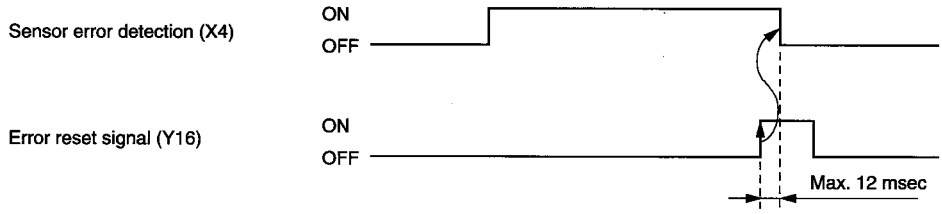

(6) 'Excessive Correction Amount' Detection (X5):

This signal turns ON when the amount of current position correction which occurs (in response to the current position preset signal) exceeds the permissible correction amount designated by the parameter setting. Even if 'X5' turns ON, the current position preset operation will be executed, and A1S62LS operation will continue.

'X5' will go OFF when 'Y16' (error reset signal) is executed by the sequence program.

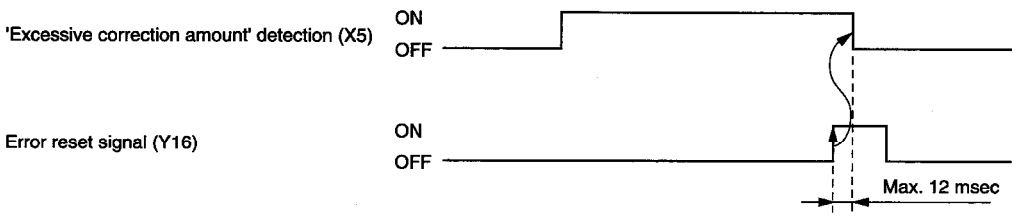

(7) 'Excessive Current Position Change' detection (X6):

This signal turns ON when the amount of current position change (every 20 msec) exceeds the permissible amount designated by the parameter setting.

Even if 'X6' turns ON, signal outputs which are based on the current position value will continue.

'X6' will go OFF when 'Y16' (error reset signal) is turned ON by the sequence program.

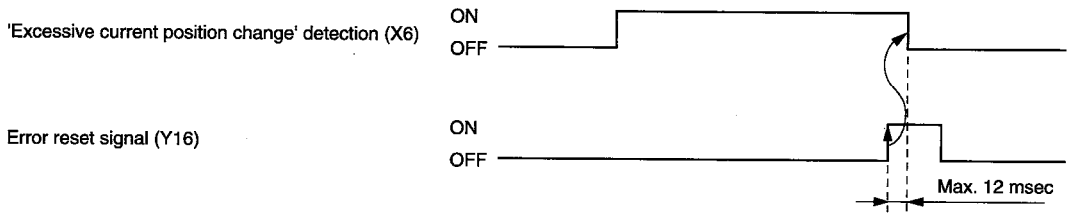

(8) Error Detection (X7):

This signal comes ON when any of the X2, X3, X4, X5, or X6 signals come ON, or when any of the error signals shown in section 8.1 occur.

'X7' will go OFF after the cause of the error has been corrected, and the 'Y16' (error reset signal) has been turned ON by the sequence program.

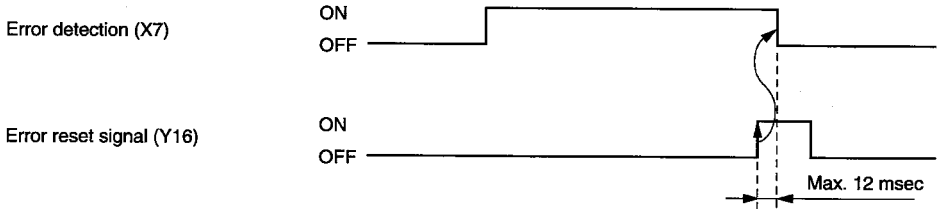

(9) Limit SW Output/Positioning Output ON/OFF Status Detection (X8 - XF):

These signals go ON or OFF according to the ON/OFF status of the following outputs:

When only the limit SW output function is used:

Channels 0-7.

When the limit SW output and positioning functions are used jointly:

Motor control signals (FWD, RVS, high-speed, low-speed, brake release, in-position, positioning in progress, operation error, etc.).

(10) 'PC Ready' Signal (Y10):

This signal is used to switch the A1S62LS's operation status (online/offline).

Y10 ON: Online Y10 OFF: Offline

For the sequence mode, Y10 serves as 'Write' command of initial setting or parameter, and program Nos. 1 to 8.

When the sequence mode is selected, the data stored in the buffer memory for data communication with the PC CPU is loaded to the A1S62LS when Y10 turns ON.

REMARKS

The difference between the 'online' and 'offline' status is shown below.

Online

PC ready (Y10) is ON, and RUN mode is established.

↓

Online (X1) ON

↓

Status	Operation	Processing
RUN mode	Positioning	Started when Y11 comes ON ↑, with Y12 OFF. Stopped when Y12 comes ON ↑.
	JOG	'Forward' when Y13 comes ON; 'Reverse' when '14' comes ON; 'Stop when Y13 (Y14) goes OFF.
	Limit SW output	Y15 ON: Limit SW output occurs. Y15 OFF: Limit SW output stopped (all points).

Note 1: Positioning operation and JOG commands will not be received when the 'error detection' signal (X7) is ON.
Note 2: JOG command will not be received during the positioning operation.
Note 3: Positioning commands will not be received during the JOG operation.
Note 4: Positioning and JOG commands will not be received when 'limit SW output function only' has been designated at the 'function selection' parameter setting.
Note 5: If even one of the initial settings has not been designated, error 51 will occur, and an 'online' status cannot be established even if the 'PC ready' signal (Y10) is turned ON.

Offline

PC ready' signal (Y10) is OFF, or a mode other than RUN is established.

↓

Online (X1) OFF

↓

Output when offline status is established is according to the parameter settings.

↓

Status	Operation	Processing
Y10 OFF when in RUN mode	Positioning	All points OFF
	Limit SW output	1) All points OFF
		2) Last status is maintained
Initial setting parameter setting Each mode (see note 1)	Positioning	All points OFF
	Limit SW output	1) All points OFF
		2) Last status maintained
TEST mode (see note 1)	Positioning	Positioning commands can be executed by key input.
	Limit SW output (see note 3)	1) All points OFF
		2) Last status maintained
		3) Limit SW output (see note 4)

Note 1: 'PC ready' signal (Y10) can be either ON or OFF.
Note 2: If switched to 'offline' during an 'online' positioning operation (or if switched to 'online' during a TEST mode positioning operation), positioning outputs will go OFF (all points).
Note 3: Limit SW output items 1), 2), and 3) above are designated by parameter settings.
Note 4: When limit SW output is OFF or in a 'hold' status, output can be executed by pressing the [SET] key.

POINT

TEST mode can be selected only when the VS-T62 external setting unit is connected.

(11) Positioning START Signal (Y11):

This signal starts the positioning operation.

The motor control signals used for the positioning operation will be output from the designated channels when the following conditions are established:

Online status

Y12 (positioning STOP signal) is OFF.

Y11 is turned ON by the sequence program

Positioning will begin when the leading edge of Y11 is detected. At this time, the positioning STOP signal must be OFF.

(12) Positioning STOP Signal (Y12)

This signal stops the positioning operation.

When Y12 is turned ON by the sequence program, the positioning operation is stopped, and output from the channels designated for the positioning operation is turned OFF. The positioning operation is stopped when the leading edge of Y12 is detected.

(13) FWD (Forward) JOG Signal (Y13):

This is the forward direction JOG signal.

During online operation, the A1S62LS will keep the FWD signal ON for as long as Y13 is kept ON by the sequence program. If Y13 is turned ON during the positioning operation, it will be ignored.

(14) RVS (Reverse) JOG Signal (Y14):

This is the reverse direction JOG signal.

During online operation, the A1S62LS will keep the RVS signal ON for as long as Y14 is kept ON by the sequence program. If Y14 is turned ON during the positioning operation, it will be ignored.

(15) 'Limit SW Output Enabled' Signal (Y15):

When Y15 is turned ON by the sequence program during online operation, the A1S62LS will execute limit switch outputs.

Y15 is not related in any way to the positioning control signals.

When Y15 is turned OFF, limit switch outputs will also be turned OFF.

(16) Error Reset Signal (Y16):

The following operation error signals will be reset after the cause of the error has been corrected, and the sequence program has turned the Y16 signal ON:

X2 (Upper limit overtravel detection)

X3 (Lower limit overtravel detection)

X4 (Sensor error detection)

X5 (Excessive correction amount detection)

X6 (Excessive current position change amount detection)

X7 (Error detection)

The error code which has been stored in the buffer memory (Address: 7) will also be cleared (0) at this time. The error 'reset' and error code 'clear' timing is continuously operative while Y16 is ON.

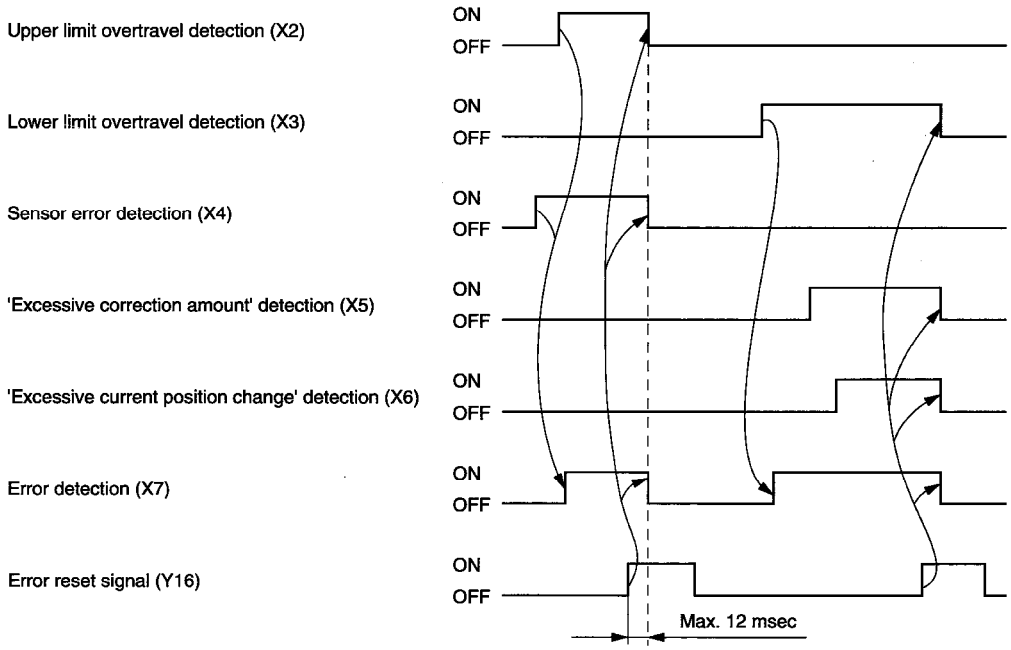

(17) 'Current Position Preset 1 Disable' Signal/'Current Position Preset Command' (Y17):

When Y17 is turned ON by the sequence program, the current position preset 1 function (executed by external input) will be disabled.

When 'Current Position Preset' for the sequence format is active, Y17 serves as 'Current position preset command (leading edge detection)'.

This signal is also operative while in the TEST mode.

(18) 'Current Position Preset 2 Disable' Signal (Y18):

When Y18 is turned ON by the sequence program, the current position preset 2 function (executed by external input) will be disabled. This signal is also operative while in the TEST mode.

(19) Mode lock signal (Y19):

Turning this signal ON locks the mode to RUN.

When Y19 is turned ON by the sequence program in RUN mode, mode change operation will not be accepted.

Turning Y19 ON by the sequence program in any mode other than RUN mode does not affect operation. However, changing to another mode becomes impossible when RUN mode is selected.

3.6 Buffer Memory

The A1S62LS contains a buffer memory which is used for data communication with the PC CPU. The buffer memory configuration and content is shown below.

Data readout of all areas can be executed by the sequence program.

Address (decimal)			Writing Conditions: When designated by sequence program	Writing Conditions: When designated by VS-T62 key input
0		(L) Current position value (Scaling binary)	Writing disabled	Writing disabled
1		(H)		
2		(L) Current position value (sensor binary)		
3		(H)		
4		'All channel output' status		
5		Program No. answerback		
6		Manual mode		
7		Error code	Writing disabled	Writing disabled (only 'error reset' setting is possible)
8		Limit SW output disable setting	Writing enabled at any time	Writing disabled
9		Program No. setting	Writing enabled at any time	Writing disabled
10		(L) Target stop position setting data	Writing enabled at any time	Writing disabled
11		(H) (positioning) (Scaling binary)		
12	CH.0	Number of multidogs	- RUN mode Writing enabled at any time - Writing enabled when '1' is stored at 'write select' bit in sequence mode.	Executed at PRGM mode 'copy' operation.
13		(L) Dog 0 ON position		
14		(H) setting data		
15		(L) Dog 0 OFF position		
16		(H) setting data		
≈	≈	≈		
51		(L) Dog 9 OFF position		
52		(H) setting data		
53	CH.1	Number of multidogs		
54		(L) Dog 0 ON position		
55		(H) setting data		
56		(L) Dog 0 OFF position		
57		(H) setting data		
≈	≈	≈		
92		(L) Dog 9 OFF position		
93		(H) setting data		
94	CH.2	Number of multidogs		
95		(L) Dog 0 ON position		
96		(H) setting data		
97		(L) Dog 0 OFF position		
98		(H) setting data		
≈	≈	≈		
664	CH.15	(L) Dog 9 ON position		
665		(H) setting data		
666		(L) Dog 9 OFF position		
667		(H) setting data		

Address (decimal)		Writing Conditions	
		When designated by PC CPU program	When designated by VS-T62 key input
668 (L) / 669 (H)	Speed output	Writing disabled	Writing disabled
670 (L) / 671 (H)	Hold current position (scaling binary)		
672 (L) / 673 (H)	Hold current position (sensor binary)		
674 (L) / 675 (H)	FWD stop zone after learning		
676 (L) / 677 (H)	RVS stop zone after learning		
678	Speed limit	Writing enabled at any time	
679	Positioning pattern data buffer memory selection		
680 (L) / 681 (H)	Medium-speed zone		Writing enabled only in PRM of manual mode.
682 (L) / 683 (H)	Low-speed zone		
684 (L) / 685 (H)	FWD stop zone		
686 (L) / 687 (H)	RVS stop zone		
688 (L) / 689 (H)	In-position zone		
690 (L) / 691 (H)	Current position preset input 1		Writing disabled
692 (L) / 693 (H)	Current position preset input 2		
694	A1S62LS No. display data		
695 ∫ 699	Not used		

Address (decimal)			Writing Conditions	
			When designated by PC CPU program	When designated by VS-T62 key input
700	Sequence mode selection		Writing enabled in RUN or TEST mode	Writing disabled
701	Sequence mode answerback		Writing disabled	
702	Sensor selection/ sensor rotation direction	(90)	Writing enabled in INIT of the sequence mode	Writing enabled in INIT.SET of manual mode
703	Decimal point position	(91)		
704 (L) / 705 (H)	Scale length	(92)		
706	Not used			
707 (L) / 708 (H)	Minimum current position value	(93)	Writing enabled when '1' is stored at 'write select' bit.	
709 (L) / 710 (H)	Current position value	(94)	Writing enabled in PRM of sequence mode	Writing enabled in PRM of manual mode
711	Function	(50)		
712	Positioning format	(51)		
713	Positioning direction	(52)		
714 (H) / 715 (L)	Overshoot amount	(53)		
716 (H) / 717 (L)	Medium-speed zone	(54)		
718 (H) / 719 (L)	Low-speed zone	(55)		
720 (H) / 721 (L)	Stop zone	(56)		
722 (H) / 723 (L)	In-position zone	(57)		
724 (H) / 725 (L)	Upper limit value	(58)		
726 (H) / 727 (L)	Lower limit value	(59)		
728	Start from stop zone	(60)		
729	Motion non-detection timer	(61)		
730	Motion misdirection non-detection timer' area	(62)		
731	Positioning end detection timer	(63)		
732	JOG low-speed timer	(64)		
733	No. of protected channels	(65)		
734	Offline channel output status (other than RUN mode)	(66)		
735	Offline channel output status (RUN mode)	(67)		
736 (L) / 737 (H)	Permissible current position change amount	(68)		
738 (L) / 739 (H)	Permissible correction amount	(69)		
740	Current position preset function	(70)		
741 (L) / 742 (H)	FWD current position preset value 1	(71)		
743 (L) / 744 (H)	RVS current position preset value 1	(72)		
745 (L) / 746 (H)	FWD current position preset value 2	(73)		
747 (L) / 748 (H)	RVS current position preset value 2	(74)		
749	Speed gate time	(75)		
750	Speed sampling time	(76)		

Figures in brackets are parameter numbers.

IMPORTANT

Write data from addresses 702 to 750 to the default setting/parameter setting area to back it. (Refer to Section 3.6.23.)

3.6.1 'Sensor current position' storage area

The machine's current position within the scale length is detected by the ABSOCODER sensor, and that position value is stored in this area as a 'sensor binary value'.

The ranges for sensor binary current position values are as follows:

Multi-turn type MRE: 0 - 131071 (0 - 1FFFF #).

3.6.2 'Scaling binary current position' storage area

The sensor binary current position value is converted to 'mm' or 'inch' units, and the 'current position minimum value' is then added to produce the 'scaling binary current position' value which is stored in this area.

(1) Range for scaling binary current position value:

-99999 to 999999 (FFFE7961# to 000F423F#)

(2) Minus current position values are stored in a 2's complement format.

3.6.3 Output status storage area

This area is used to store the output status (ON/OFF status) of channels 0 - 15.

(1) The output statuses are stored as follows:

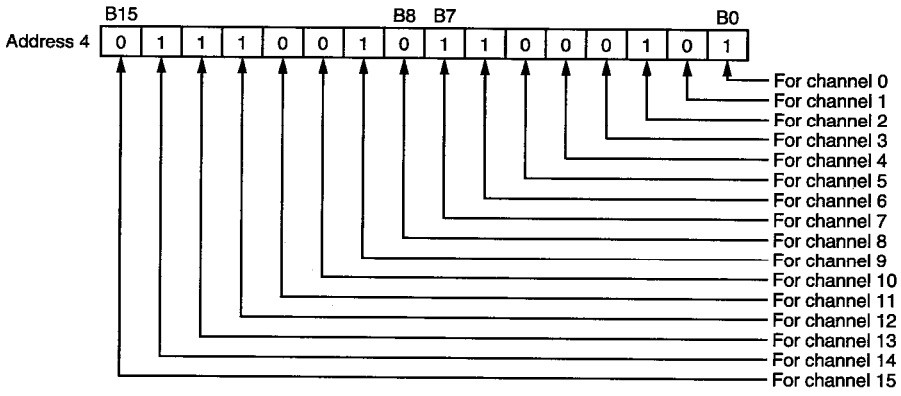

'1' is stored at the bit which corresponds to the channel which is ON.

'0' is stored at the bit which corresponds to the channel which is OFF.

3.6.4 Program No. answerback storage area

The 'answerback program No.' for the program No. designated for use at the limit switch output function is stored in this area.

(1) As shown below, only the first 4 bits are operative in this storage area.

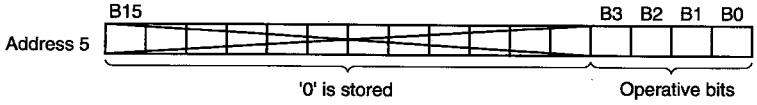

(2) Binary values are stored for program Nos. 0 - 8 values.

3.6.5 Manual mode storage area

This is the storage area for using VS-T62 operation modes.

(1) The operation modes are stored as follows:

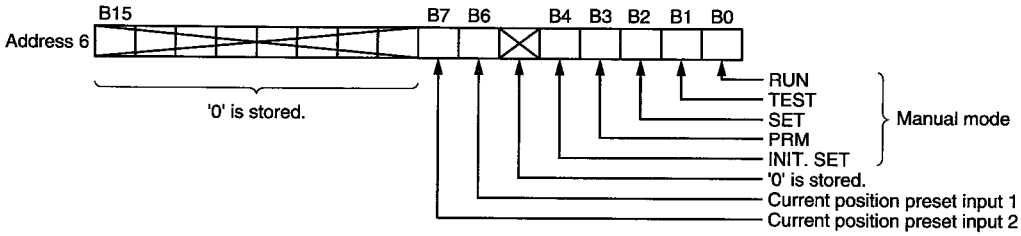

1' is stored at the bit which corresponds to the selected mode.

When not using the VS-T62, '1' is stored to B0.

When the corresponding current position preset input is ON, '1' is stored.

'0' is stored at the other bits.

3.6.6 Error code storage area

This is the area where error codes are stored when errors occur.

For error code details, refer to section 8.1.

(1) Error codes are stored as binary values.

(2) This storage area is cleared by any of the following actions:

(a) When the sequence program turns the Y16 signal ON, thereby executing an 'error reset'.

(b) When the PC CPU is reset.

(c) When the PC power is turned OFF.

(d) When the [CLR] key of the VS-T62 external setting unit is pressed.

(e) When manual mode is changed to another mode.

(f) When sequence mode is changed to RUN in manual mode.

(g) When RUN or TEST in manual mode is changed to sequence mode.

3.6.7 Limit switch 'output disabled' setting area

The settings made at this area determine (for each channel) whether or not limit switch output is to occur.

Although this area can be written to at any time by the sequence program, the settings are only operative when an online status is established.

(1) Setting are made by designating '0' or '1' for the bits which correspond to each of the channels:

0: Limit switch output enabled

1: Limit switch output disabled

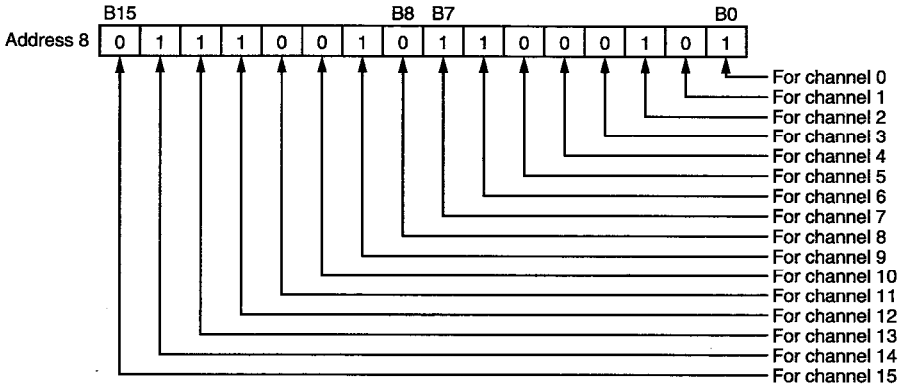

(2) For current position detection function, the contents set in this area are ignored.

(3) When used for the positioning function, the positioning control output channels (CH8 to CH15) will ignore the settings registered at this area.

(4) Operation cannot be verified at the A1S62LS monitor LEDs for channels where the limit switch output 'disabled' setting is designated.

(5) Even if the limit switch output 'enabled' setting is designated, limit switch output will not occur if the A1S62LS's Y10 (PC ready) or Y15 (limit SW output enabled) signals are OFF.

(6) When the power is turned ON, or when the following actions occur, the default setting value '0' (limit SW output enabled) will be designated at all channels.

(a) When PC CPU is reset.

(b) When PC power is turned OFF.

3.6.8 Program No. setting area (for limit SW output function)

This is the setting area where the program Nos. (total of 9) to be used for the limit switch output function are designated.

Although this area can be written to at any time by the sequence program, the settings are only operative when an online status is established.

(1) Setting is made by designating the program No. (0-8) where limit switch output ON/OFF data is registered.

Program 0 differs from Programs 1 to 8 as described below.

Program 0: Program data is not retained when power is OFF.

Programs 1 to 8:

Program data is retained in the A1S62LS even when power is OFF.

(2) As shown below, only the first 4 bits are operative in this setting area.

(3) If the numeric value indicates at the first 4 bits is in the 9# to F# range, error code '30' will be activated.

3.6.9 Target stop position setting area (positioning operation)

This is the area where the target stop position for the positioning function is designated. Although this area can be written to at any time by the sequence program, the setting data is only operative when an online status is established, and the positioning START signal (Y11) is ON.

(1) The setting value is written as a 'scaling binary' value.

(2) The permissible setting range is as follows:

[Minimum current position value] to [Minimum current position value + scale length -1].

(3) If a setting is designated outside the permissible range, the A1S62LS will turn the X7 signal (error detection) ON, and error code '41' will be stored at Address 7 of the buffer memory.

Even if the target stop position setting is within the permissible range, the same error as above will occur if the following conditions exist:

When the position following a positioning overshoot is outside the permissible setting range.

When a positioning START occurs within the stop zone, and a position equivalent to the 'length of the stop zone multiplied by 2' is outside the permissible setting range.

3.6.10 Program No. 0 limit switch output ON/OFF data setting area (positioning)

The program No. 0 ON/OFF data used for the limit switch output function is stored at this area.

When copying program No. 0 in the PROGRAM mode, avoid writing the program No. 0 limit switch output data from the sequence program.

(1) The setting data must be designated for each channel, and consists of the 'number of multi-dogs', and the ON/OFF position data for each dog.

(2) The 'number of multi-dogs' setting is written as a binary value.

The ON/OFF position data is written as a 'scaling binary' value. Error '31' will be activated if dog positions are outside the detection range or if overlapping dogs exist. There are separate ON setting and OFF setting areas for writing the dog position data. Discrimination between the ON and OFF writing areas is executed automatically according to the data content of dog No. 0.

There can be no mixing of ON and OFF areas on a single channel.

Examples of the ON area and OFF area position writing are given on the following line.

(a) 'ON Area' [Limit SW 'closed (a) contact' Operation] Dog Position Writing:

The numerical pairs used to write the ON position data are smaller than those used to write the OFF position data. If the numerical values for each dog are not written in order, beginning from the lowest and proceeding to the highest, error '31' will be activated. (The value of the dog No. 0 position must be smaller than that for dog No. 1.)

Channel No.	Switch Operation
0	Dog. No. 0 1 2 ON OFF Position 100 250 350 500 650 700

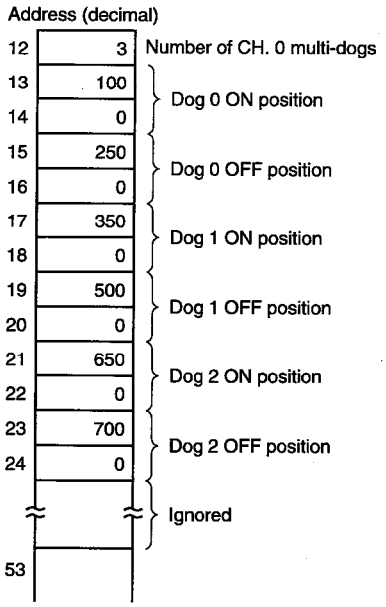

(b) 'OFF Area' [Limit SW 'open (b) contact' operation] Dog Position Writing:

The numerical pairs used to write the ON position data are larger than those used to write the OFF position data. If the numerical values for each dog are not written in order, beginning from the lowest and proceeding to the highest, error '31' will be activated.

Channel No.	Switch Operation
1	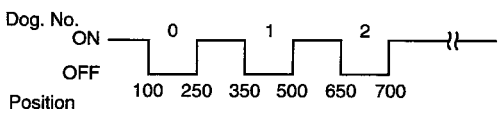

Address (decimal)		
53	3	Number of CH. 1 multi-dogs
54	250	Dog 0 ON position
55	0	
56	100	Dog 0 OFF position
57	0	
58	500	Dog 1 ON position
59	0	
60	350	Dog 1 OFF position
61	0	
62	700	Dog 2 ON position
63	0	
64	650	Dog 2 OFF position
65	0	

(3) The 'number of multi-dogs' setting range is as follows:

0-10 (only the first 4 bits of setting data are operative)

If a setting of '0' is designated, the dog ON/OFF position data at that channel will be inoperative.

Any setting exceeding '10' will be processed as '10'.

(4) The setting range for the ON/OFF position data (scaling binary values) is as follows:

[Minimum current position value] to [Minimum current position value + scale length -1]

3.6.11 Speed output storage area

This is the area where the speed output detected by the ABSOCODER sensor is stored either as binary value of the change in position within the specified time or as rpm. The desired form is selected by 'speed gate time' (address 749).

Storage methods of these values are explained below.

(1) When storing binary value (Any from 0 to 4 is selected by 'speed gate time'.)

The sensor's rotation speed is stored as sensor binary value.

This means that the change in amount of speed gate time is stored in the absolute value.

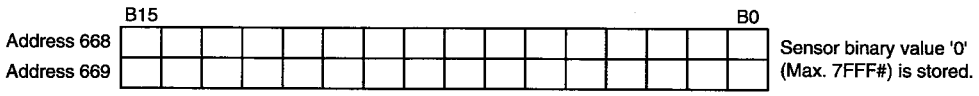

The graph below shows the gate time and the sampling time.

[When sampling time = 1/2 of gate time]

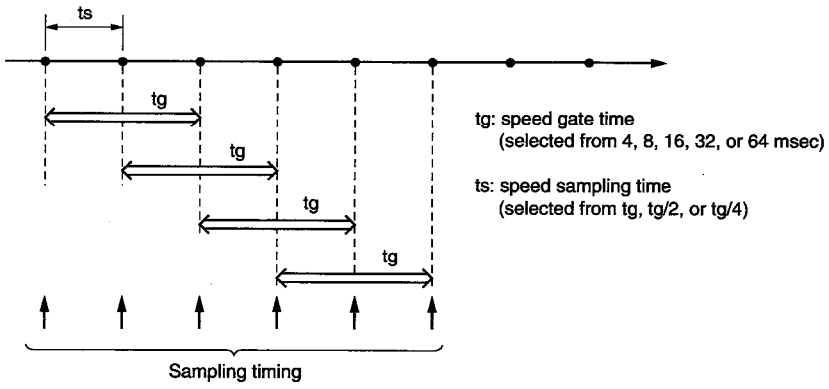

The next gate time starts when the current sampling has finished.

(2) When storing rotation speed ('5' is selected by 'speed gate time'.)

This area stores the rotation speed (rpm) internally calculated according to the current position detected by the ABSOCODER sensor.

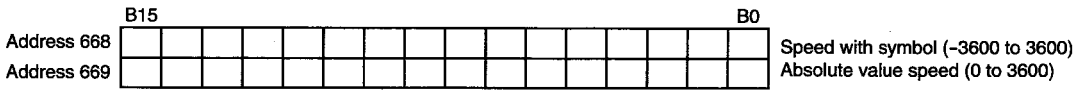

REMARKS

(1) Speed with symbol (address 668) is set regarding the rotation direction set by address 702 (sensor selection/sensor rotation direction) as 'positive (+)'.

'Negative (-)' rotation speed is stored as complement of '2'.

(2) When using the MRE-G□ type ABSOCODER sensor, the rotation speed to be stored is 1/gear ratio (□/32).

3.6.12 Hold current position storage area

This is the area where the current position is stored when current position preset input 1 or 2 (external input) is turned ON. The scaling binary value and the sensor binary values are stored. When 'current position preset' function is active, the current position before preset is stored.

Below are operation examples when 'current position preset' signal turned ON.

Current position preset function	Address 740	Current position	Preset value	Current position hold		Current position preset	
				Operation	Hold current position	Operation	Preset current position
Disabled	0	300	100	Held	300	Invalid	300
Parameter format	1	300	100	Held	300	Valid	100
Buffer memory format	2	300	100	Held	300	Valid	100
Sequence format	3	300	100	Held	300	Invalid	300

REMARKS

(1) Current position preset input value is commonly used for current position preset function and current position hold function.

(2) Current position hold function is active when either current position preset input 1 or 2 is turned ON.

(3) Current position hold function is active while power is ON.

3.6.13 FWD/RVS stop zone storage area

This is the area where the stop zone corrected by the learning function is stored. Two areas are provided, one for the FWD (forward) direction and one for the RVS (reverse) direction.

When the learning function is disabled, the stop zone used for positioning is stored.

3.6.14 Speed limit setting area

This is the area where speed limitation is applied to positioning by speed stepping format or speed switching format.

This can be written at any time by the sequence program, but the setting applies only when positioning start signal (Y11) is turned ON while online.

'3' (no limitation) is automatically set as default when the PC CPU is reset or the PC power supply is turned OFF.

Speed limit setting	Speed stepping format	Speed switching format
1	Positioning only at low speed.	Positioning only at low speed.
2	High speed is not output.	No speed limitation applied.
3	No speed limitation applied.	

Any setting other than 1 to 3 will cause an error.

Speed limitation cannot be applied to JOG operation.

3.6.15 Positioning pattern data buffer memory selection area

This is the area where the pattern data used for positioning is set to Via Buffer Memory or Parameter Setting.

When set to Via Buffer Memory, the data can be changed by the PC CPU even while online.

The following shows how to set this area. Only the lower five bits are active.

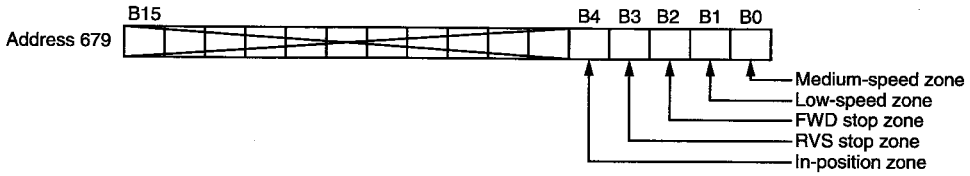

Set '1' to the bit corresponding to the pattern data for which buffer memory is used.
Set '0' to other bits.
When the PC CPU is reset, the above settings are reset to '0'.

3.6.16 Medium-speed zone setting area

This is the area where the medium-speed zone used for positioning by speed stepping format is set.

This can be written at any time by the sequence program, but the setting applies only when positioning start signal (Y11) is turned ON while online and '1' is set to 0 bit of positioning pattern data buffer memory selection area (address 679).

The medium-speed zone set to the parameter is automatically set as default when the PC CPU is reset or the PC power supply is turned OFF. Further, if the medium-speed zone is set in PRM mode, this value is also set to this area.

The setting value is written as scaling binary value.

Writing a value out of the setting range will cause an error.

3.6.17 Low-speed zone setting area

This is the area where the low-speed zone used for positioning by speed stepping format or speed switching format is set.

This can be written at any time by the sequence program, but the setting applies only when positioning start signal (Y11) is turned ON while online and '1' is set to the 1st bit of positioning pattern data buffer memory selection area (address 679).

The low-speed zone set to the parameter is automatically set as default when the PC CPU is reset or the PC power supply is turned OFF. Further, if the low-speed zone is set in PRM mode, this value is also set to this area.

The setting value is written as scaling binary.

Writing a value out of the setting range will cause an error.

3.6.18 FWD/RVS stop zone setting area

This is the area where the stop zone used for positioning by speed stepping format or speed switching format is set.

This can be written at any time by the sequence program, but the setting applies only when positioning start signal (Y11) is turned ON while online and '1' is set to the 2nd or 3rd bit of positioning pattern data buffer memory selection area (address 679).

The stop zone set to the parameter is automatically set as default when the PC CPU is reset or the PC power supply is turned OFF. Further, if the stop zone is set in PRM mode, this value is also set to this area.

The setting value is written as scaling binary.

Writing a value out of the setting range will cause an error.

Two areas are provided, one for FWD (forward) and one for RVS (reverse).

3.6.19 In-position zone setting area

This is the area where the In-position zone used for positioning by speed stepping format or speed switching format is set.

This can be written at any time by the sequence program, but the setting applies only when positioning start signal (Y11) is turned ON while online and '1' is set to the 4th bit of positioning pattern data buffer memory selection area (address 679).

The In-position zone set to the parameter is automatically set as default when the PC CPU is reset or the PC power supply is turned OFF. Further, if the In-position zone is set in PRM mode, this value is also set to this area.

The setting value is written as scaling binary.

Writing a value out of the setting range will cause an error.

3.6.20 Preset value for current position preset input 1 and 2

This is the area where the preset value used for current position preset function by buffer memory format or sequence format is stored.

This can be written at any time by the sequence program, but the setting applies only when external input is accepted for the current position preset by buffer memory format. Two external inputs are available; one for current position preset input 1 and the other for current position preset input 2.

'0' is automatically stored as default when the PC CPU is reset or the PC power supply is turned OFF.

The setting value is written as scaling binary.

The setting range is from [minimum current position value] to [minimum current position value + scale length -1]. Writing a value out of the range will cause an error.

The preset value for current position preset input 1 is used for the current position preset by sequence format.

3.6.21 Sequence mode selection area

This is the area where the appropriate mode for data writing conditions is selected when writing the parameter data and the limit switch output ON/OFF data from the PC CPU.

This mode is selected by the PC CPU. Therefore, this is called 'sequence mode' to distinguish it from the mode (manual mode) selected by the VS-T62.

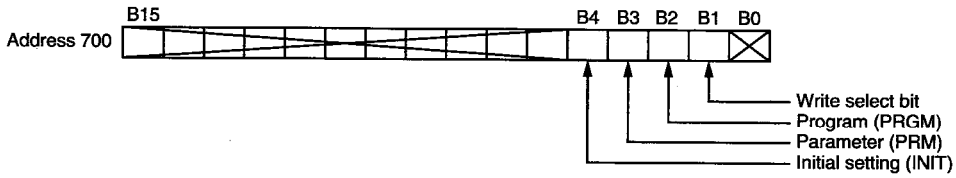

Set '1' to the bit corresponding to the desired sequence mode when RUN or TEST in manual mode is selected. Set '0' to other bits. Setting '1' to both bits will cause an error.

The data written to the buffer memory for data communication with the PC CPU is loaded to the A1S62LS when the PC CPU signal (Y10) is turned ON in sequence mode.

Even when sequence mode is selected, if manual mode is changed to anything other than RUN or TEST, priority is given to manual mode.

The 'write select' bit is active only in the following cases:

(a) Current position is set by INIT in sequence mode.

(b) Program is written by PRGM in sequence mode

Set '1' when writing in the above cases.

3.6.22 Sequence mode answerback area

This is the area where the sequence mode selected in the Sequence Mode Selection Area is stored.

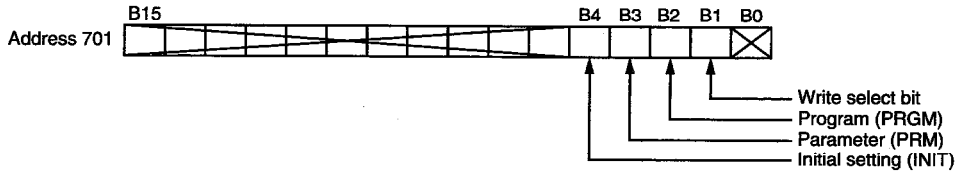

'1' is stored in the bit corresponding to the selected sequence mode.

'0' is stored in other bits.

'0' is stored when the manual mode is changed to anything other than RUN or TEST.

3.6.23 Initial settings and parameters storage/setting area

In this area, save the data entered according to default setting/parameter in the manual mode of the external setting module (VS-T62).
This area is a backup area for default settings and parameters.
These pieces of data can be entered through a sequence program, using the PLC CPU data exchange buffer memory (addresses 702 to 750).

[I/O with PC CPU]

The illustration below shows the parameter writing timing in sequence mode.

The data written to the buffer memory for data communication with the PC CPU is loaded to the A1S62LS (Default setting/parameter setting area) when the PC CPU signal (Y10) is turned ON while sequence mode is selected.

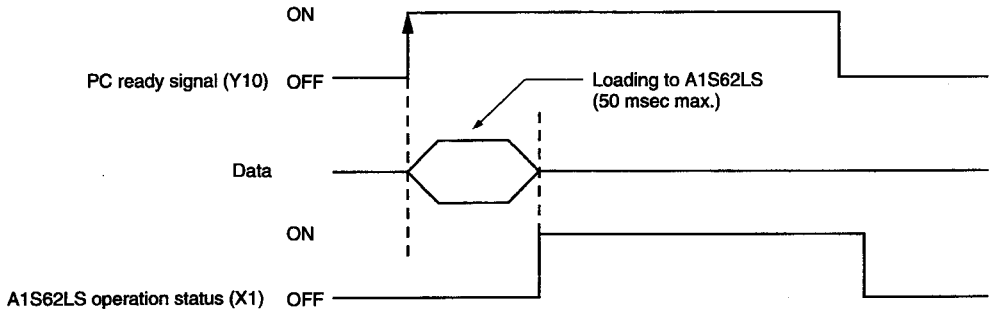

IMPORTANT

(1) If the default setting (INIT)/parameter setting (PRM) function of the manual mode of the external setting module (VS-T62) is used to enter data, the data of the buffer memory is overwritten while the default setting/parameter setting area is written.

(2) Priority is given to manual mode of the VS-T62. Therefore, when changing parameters in sequence mode, provide an interlock based on the reply in manual mode (buffer memory address 7: Manual mode storage area).

(3) Because the default setting/parameter setting area is EEP-ROM, do not exceed 10,000 writing cycles.

(4) The data in the default setting/parameter setting area is loaded to the PLC CPU data exchange buffer memory (addresses 702 to 750) after the programmable logic controller is turned on or the PLC CPU is reset.

3.6.24 A1S62LS No. display data setting area

This is the area where the VS-T62 number display area is set. Data is reset to '0' when power is turned ON.

This area is provided for convenience of data setting when using multiple A1S62LSs.

Set the number to be displayed (#0 - #FF).

This setting is effective only when using the VS-T62.

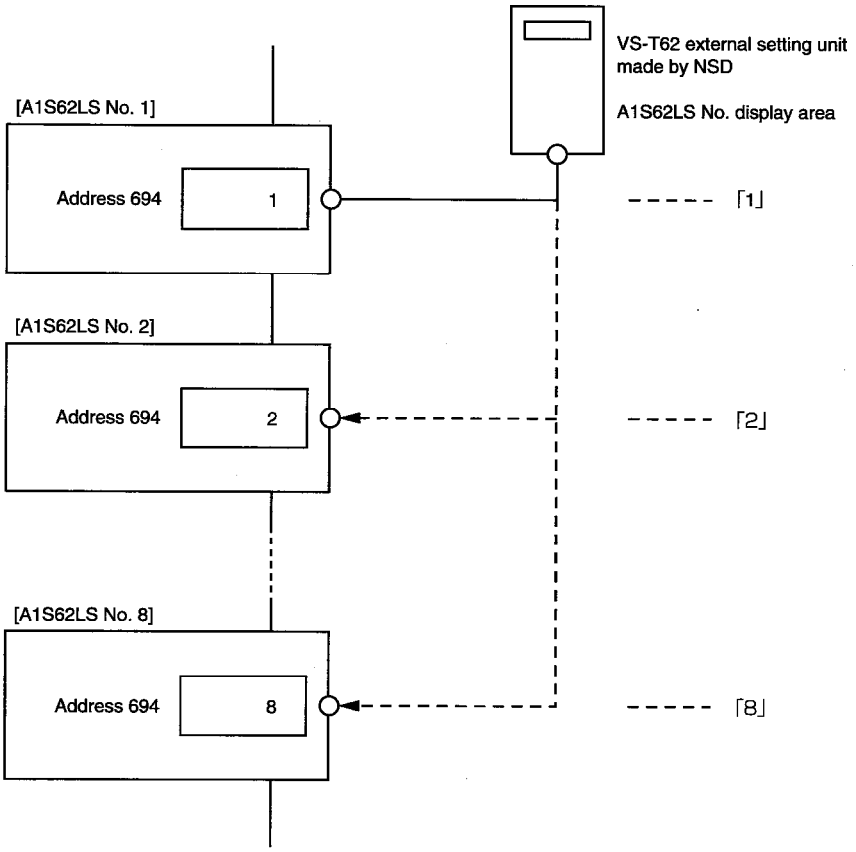

MEMO

4. HANDLING AND WIRING

This section explains how to unpack and connect the A1S62LS.

4.1 Unit Handling Precautions

The following precautions should be observed when handling the A1S62LS.

(1) As the A1S62LS is constructed from a resin-based material, it should not be dropped or subjected to severe shocks.

(2) Never remove the PCBs from their cases.

(3) Turn OFF power supply to the PC before mounting and dismounting the A1S62LS to and from the base.

(4) During the wiring procedure, be sure to prevent foreign matter such as wire clippings, etc., from getting inside the A1S62LS (the top part of the A1S62LS is particularly vulnerable).

(5) Tighten the A1S62LS securing screw (M4) within the torque range of 8-12 kg·cm (6.7-10.0 lb·in.).

(6) Place the cover on the connector when not connecting any peripheral equipment.

4.2 Name of Parts

The illustration below shows the configuration of the A1S62LS.

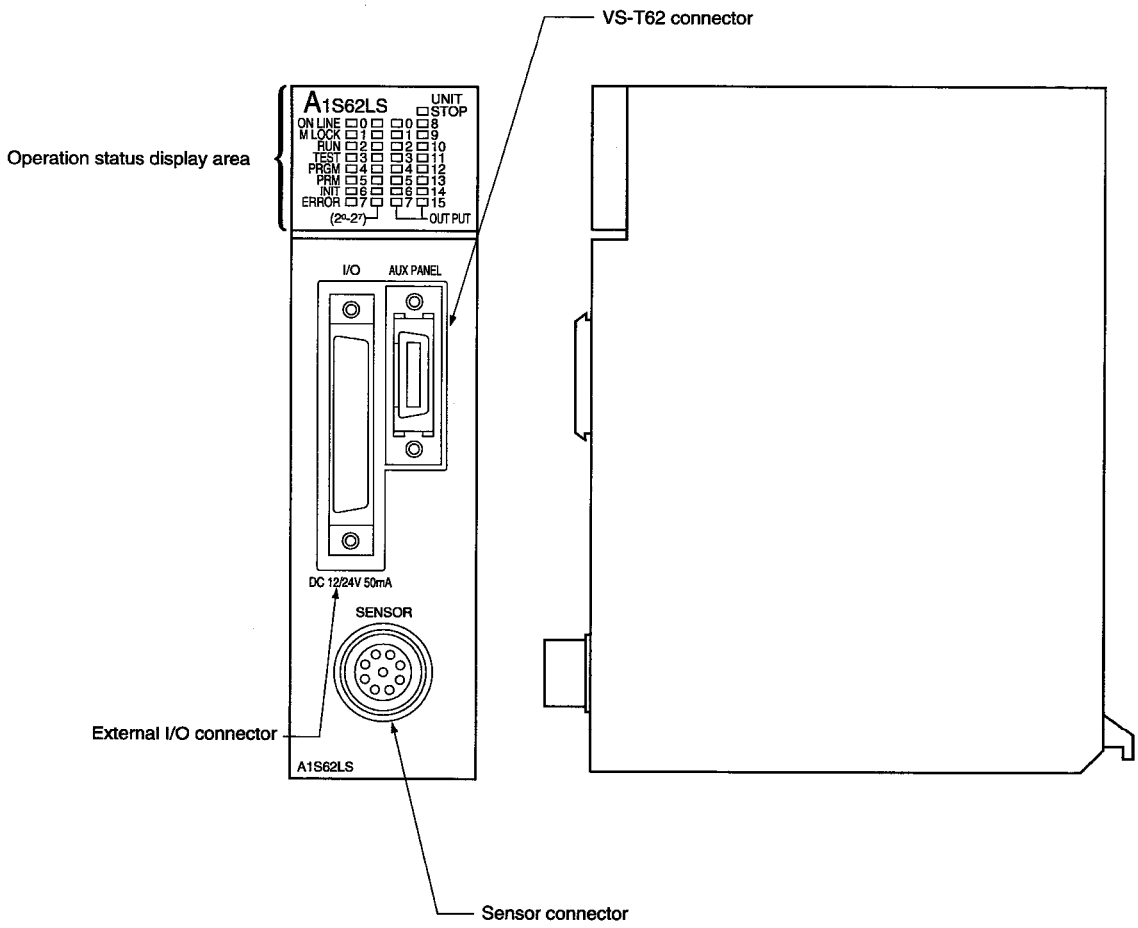

Functions of Operation Status Display Area

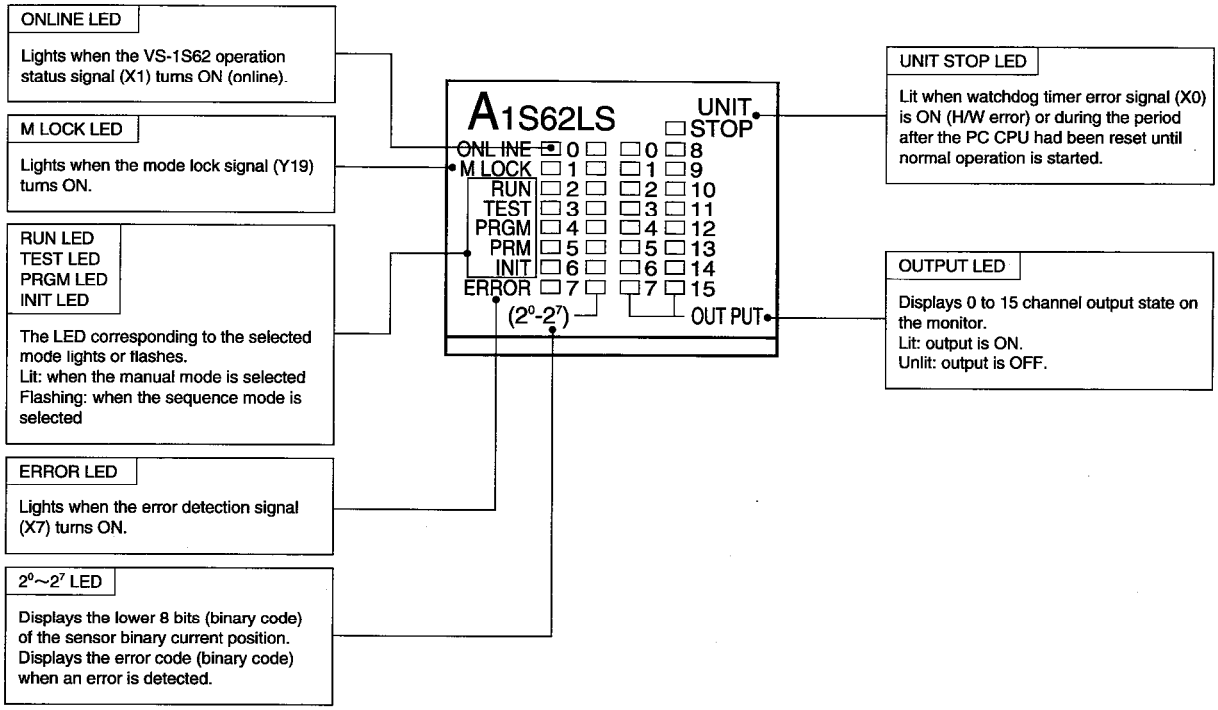

4.3 Wiring Precautions

The wiring precautions for connections between the A1S62LS and external devices, and details regarding wiring connectors are explained in this section.

4.3.1 Wiring precautions

The following wiring precautions should be observed when connecting the A1S62LS to external devices.

(1) The A1S62LS signal lines and ABSOCODER sensor cable should be located as far as possible from power lines and other lines which generate a high level of electrical noise.

(2) If location near the above power lines is unavoidable, the cable duct should be separated, with individual wiring conduits being provided.

(3) When wiring conduits are used, they should be securely grounded.

4.3.2 Precautions when connecting input/output signal lines

Separate cables must be used for input and output signal lines.

4.3.3 Input/output signal line connections

For details regarding input/output wire sizes, refer to the 'External Input/Output Specifications' in section 3.3.1.

4.4 ABSOCODER Sensor Installation Precautions

This section explains precautions for ABSOCODER sensor installation.

4.4.1 Installation of MRE series ABSOCODER sensor

Installation of the ABSOCODER sensor must be executed according to the dimensions shown in the drawings at Appendix 1.1.2. Although the MRE sensor is more rugged than general optical encorders, care should be taken nevertheless to avoid shocks and unbalanced loads upon installation. For example, if an excessive radial load or thrust load is applied to the shaft-end, the sensor accuracy could be compromised. To avoid such problems, a suitable coupling method is recommended.

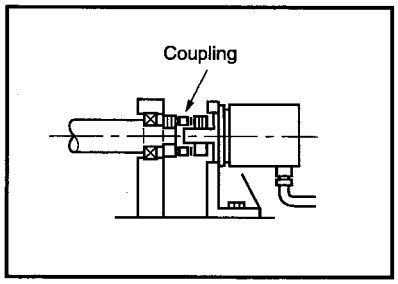

4.4.2 Precautions when connecting ABSOCODER sensor

(1) Connection should be made using the special cable, with the connector being securely tightened.

(2) If further length is desired, an extension cable (with connector) must be ordered separately.

Refer to Appendix 1.2.2 for details regarding extension cables.

(3) The maximum length for which extension is possible varies according to the ABSOCODER sensor model which is used.

Refer to Appendix 1.2.2 for details.

(4) A robotic cable must be used if the special ABSOCODER sensor cable is to be used at a movable area of the system. In such a case, the cable should never be bent to form a radius of less than 75 mm (2.95 in.).

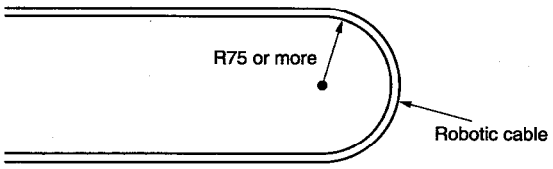

MEMO

5. CURRENT POSITION DETECTION FUNCTION

5.1 Function Description

This section explains the A1S62LS's current position detection function.

5.1.1 Current position detection function

The A1S62LS's current position detection function detects the current position using the ABSOCODER. Conventionally, this was detected by an incremental format encoder in conjunction with a counter unit.

As shown in Fig. 5.1, the current position appropriate for the rotation position of the ABSOCODER sensor is stored in the buffer memory while rotating the ABSOCODER sensor by the motor.

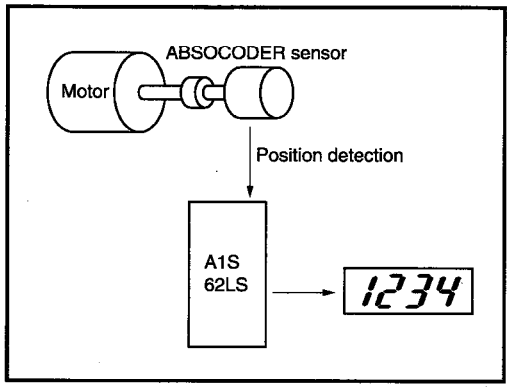

Fig. 5.1 Example of using A1S62LS

(1) The current position can be stored in the buffer memory as the sensor binary or scaling binary.

(2) The current position detection function is provided to eliminate initial setting and parameter setting when using only the encoder function of the A1S62LS.

(3) When current position unit conversion and origin-point setting are not necessary, no setting is required for the A1S62LS.

(4) The current position detection function can be used with the limit switch output function (section 6) and the positioning function (section 7). Select the desired function.

5

POINT

When using the MRE-32SP062 sensor, the factory set data can be used for the A1S62LS current position detection function.

5.1.2 Current position 'PRESET' function

When the current position 'preset' function is executed (by external input), the machine's current position will be moved (corrected) to the 'preset' position which has been designated in advance.

This function is used when a misalignment occurs between the detected position and the actual machine position, as shown below.

In the transport system shown below, an ABSOCODER sensor is mounted on the trolley's axle.
If slippage occurs during trolley movement, a misalignment will occur between the actual trolley position and the detected current position.

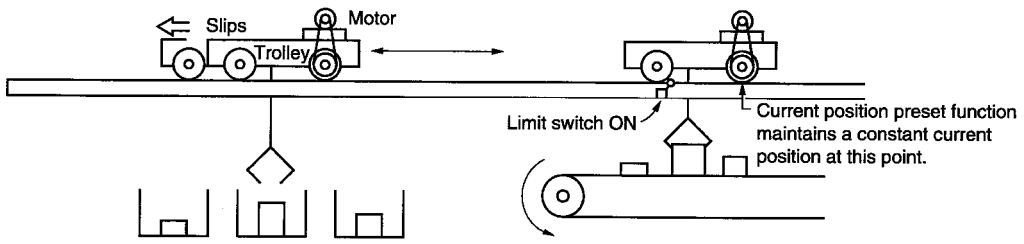

In place if the external preset input, the limit switch signal can be used to correct the trolley's position.

The following three formats are available for current position preset function.

Item \ Format	Parameter format	Buffer memory format	Sequence format
Setting value of buffer memory address 740	1	2	3
No. of preset data	4 data set by parameter (addresses 741 - 748)	2 data set by buffer memory (addresses 690 - 693)	1 data set by buffer memory (addresses 690 - 691)
Input destination of preset signal	External I/O connector (pin Nos. B4, B3)	External I/O connector (pin Nos. B4, B3)	Output signal (Y17) from PC CPU
Determination of data used	Determined by the direction of variation in current position or actual input of two external inputs.	Determined by actual input of two external inputs.	Fixed to buffer memory

(1) Two channels for current position preset input are available for the A1S62LS when using the parameter format or the buffer memory format. Each channel operates independently.

(2) For the parameter format or the buffer memory format, the current position preset data is input to the external I/O connector (pin Nos. B4, B3) of the A1S62LS via contact signal. For the sequence format, the current position preset data is input by the output signal from thePC CPU (Y17).

(3) The current position preset input is detected at its leading edge.

(4) For the parameter format, two preset values must be set; one for the FWD (forward) direction and the other for the RVS (reverse) direction.

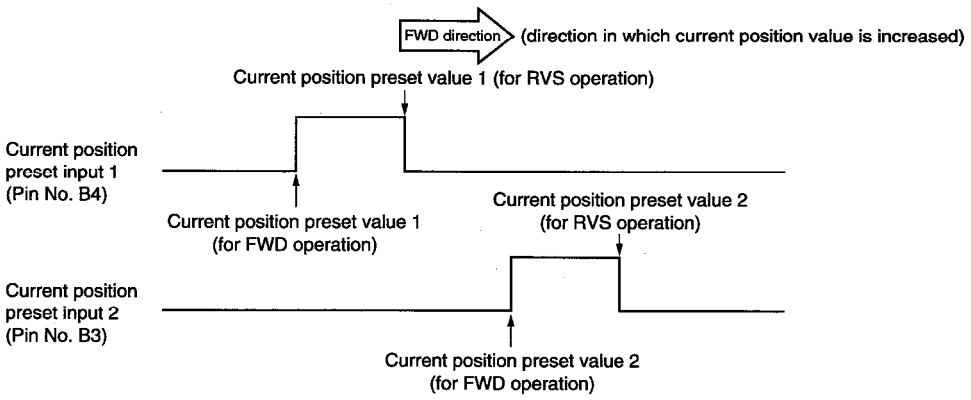

(5) For the parameter format, the A1S62LS automatically identifies the direction by referring to the current position every 100 msec inside the A1S62LS.

However, when an MRE Series sensor is used, a RVS direction speed of less than 0.44 rpm will be interpreted as a FWD direction operation.

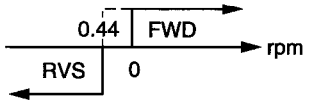

Speed model	Speed (rpm)
MRE-32SP	0.44
MRE-G64	0.88
MRE-G128	1.76
MRE-G160	2.20
MRE-G256	3.52
MRE-G320	4.40

(6) The following conditions must be satisfied in order for the current position preset function to be operative:

(a) The current position preset function must be designated as 'Valid' at the parameter setting.

No.	Address	Item	Setting value	Contents
70	740	Current position preset function	1	Parameter format
			2	Buffer memory format
			3	Sequence format

(b) Any sensor error must be reset.

(c) RUN or TEST mode must be designated, with an online status established.

(d) The current position preset 'disabled' signals (Y17, Y18) must not be ON.

Y17 is the current position preset 1 'disabled' signal, and Y18 is the current position preset 2 'disabled' signal.

When the current position preset function by the sequence format is active ('3' is set to address 740), the current position preset 1 disabled signal (Y17) serves as the current position preset command (leading edge detection).

(7) The current position preset function will not occur if the current position preset input is already ON when the power is turned ON.

(8) If both the current position preset 1 and 2 inputs are executed simultaneously, the 'preset 1' function will be executed and the 'preset 2' input will be ignored.

(9) If an current position preset input occurs during a STOP status, a forward direction will be adopted.

(10) Once an current position preset input has been received, subsequent current position preset inputs will be ignored for a period of 100 msec.

(11) When the current position preset function is executed during a positioning operation, and if the resultant positioning is to be in the reverse direction, motion will be stopped momentarily and then automatically re-started.

(12) Current Position Preset Input Response Time

This is the response time after the current position preset input turned ON until the A1S62LS presets the current position.

The response time of the current position preset varies depending on the setting of the current position preset function (address 740).

(a) Parameter format: 1, Buffer memory format: 2 (max. 3 msec)

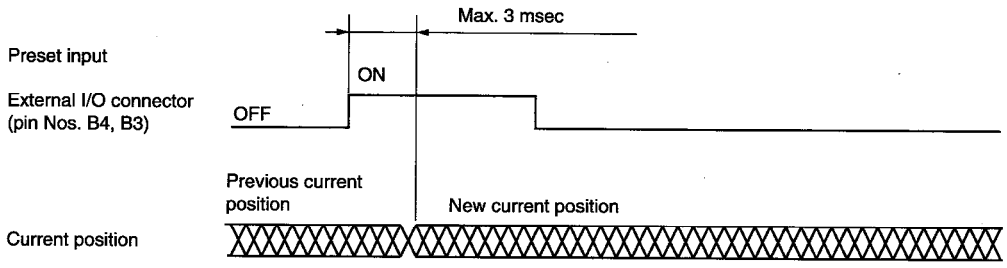

(b) Sequence format: 3 (max. 2 msec)

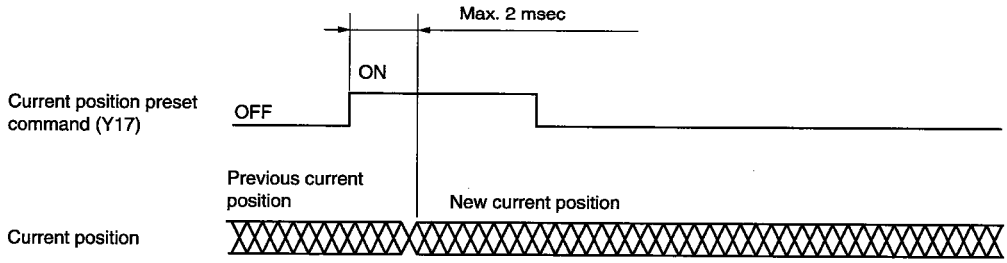

REMARKS

For the buffer memory format and sequence format, the preset data becomes effective 12 msec after the preset data is written by the TO instruction.

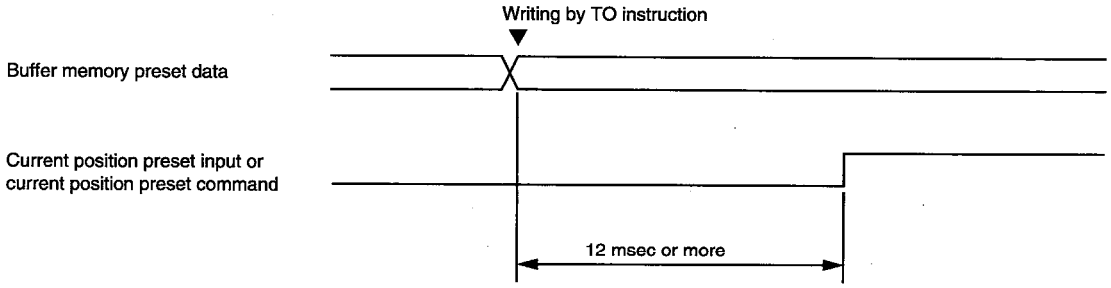

When the preset signal is input by TO instruction within 12 msec, the previous preset value may be used.

Extreme attention must be paid for applications that use preset data from the PC CPU depending on the conditions.

When power supply is turned OFF while the A1S62LS is at UNIT STOP (LED lit), the preset data is not stored.

Turning power supply ON without resetting the system may affect the current position.

When PC CPU error has occurred, eliminate the error cause and reset the system, and then turn power supply OFF.

5.2 Pre-Operation Setting Sequence

This section explains the setting sequence for the current position detection function.

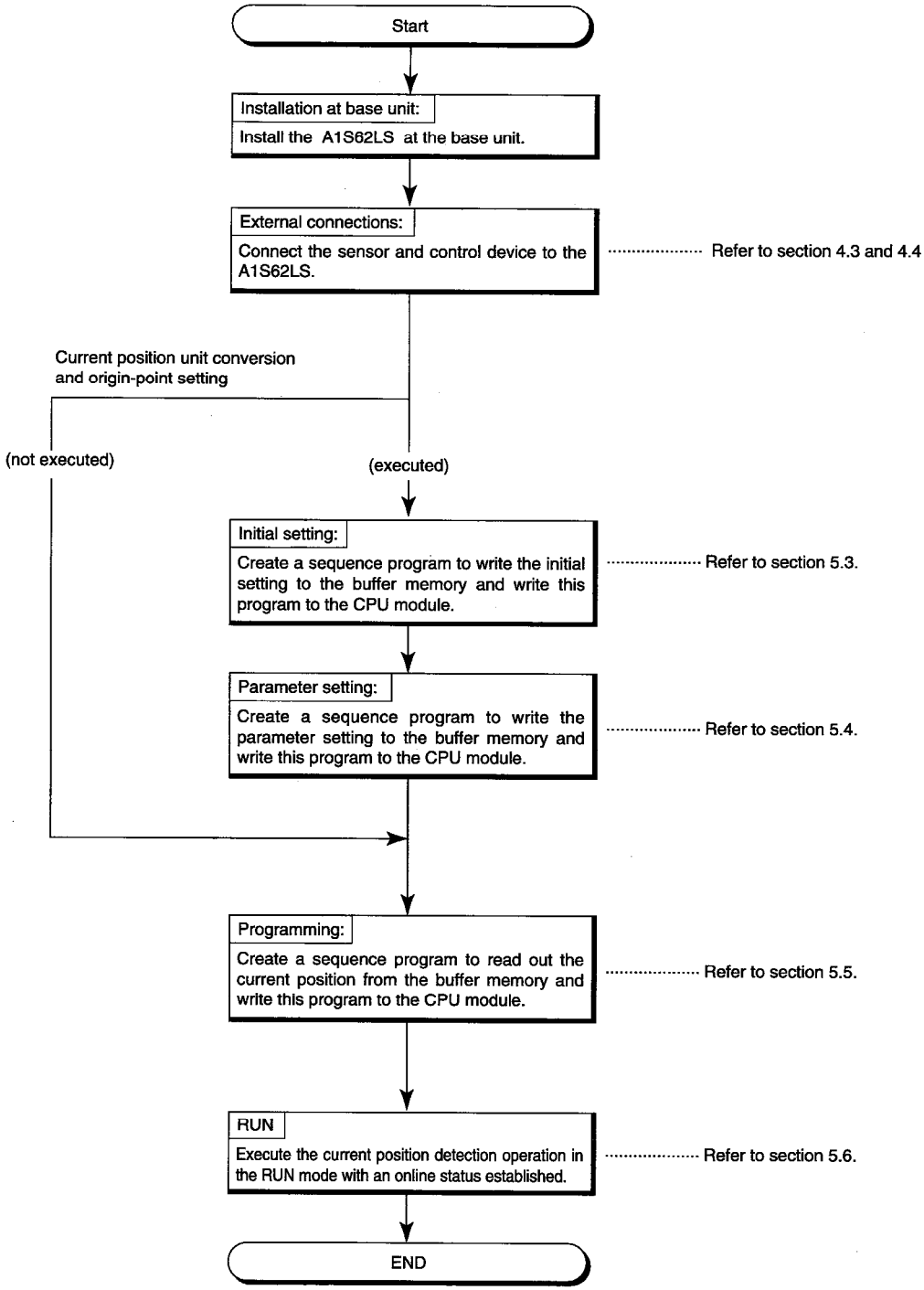

REMARKS

Settings other than current position setting can be done even when the ABSOCODER sensor is not connected.

5.3 Initial Setting

This section explains the A1S62LS's initial settings.

Initial setting values are factory-set (default).

Set the values requiring any changes only.

When setting the values in the sequence format, set '1' to the corresponding bit of the buffer memory address 700 (sequence mode selection).

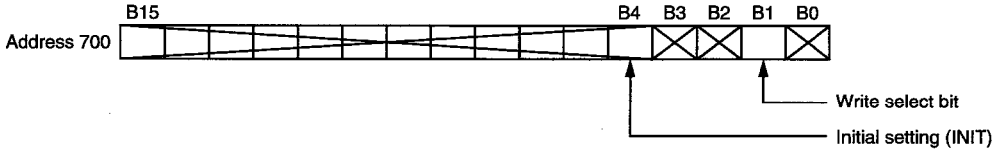

When writing the current position value, set '1' also to 'write select' bit.

For initial settings, the buffer memory address is determined for each item.

The data written to the buffer memory for data communication with the PC CPU is loaded to the A1S62LS when the PC CPU signal (Y10) is turned ON in sequence mode.

IMPORTANT

Writing to initial setting/parameter setting areas between addresses 702 and 750 shall not exceed 10,000 times.

5.3.1 Initial setting list

No.	Address	Item	Setting Data	Default Value
90	702	Sensor selection/ Sensor rotation direction	Sensor: MRE-32SP062 / MRE-G□SP062 Sensor Rotation direction: 0 ····· CW / 1 ····· CCW / 2 ····· CW / 3 ····· CCW	0
91	703	Decimal point position	0: 123456 / 1: 12345.6 / 2: 1234.56 / 3: 123.456 / 4: 12.3456 / 5: 1.23456	0
92	704(L) 705(H)	Scale length (L)	1000 to 999999	131072
93	707(L) 708(H)	Minimum current position value (K)	[-99999 to (1000000-L)]	0
94	709(L) 710(H)	Current position value	K to (K+L-1)	65536

REMARKS

The decimal point should be omitted when designating the scale length, minimum current position value, and current position value settings. The decimal point position will be according to the value designated at the 'decimal point position' setting item (703).

For initial settings, the number is determined for each item. (The number is displayed on the display area of the VS-T62.)

5.3.2 Sensor selection/sensor rotation direction setting

This section explains the sensor selection/sensor rotation direction settings.

The direction of rotation in which the position data value increases are designated as either 'CW' or 'CCW' and sensor type.

CW setting:

Position data value will increase when the sensor shaft rotates CW (viewed from shaft direction).

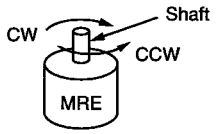

CCW setting:

Position data value will increase when the sensor shaft rotates CCW (viewed from shaft direction).

Setting contents are as below.

Item / Data	Sensor selection	Sensor rotation direction
0	MRE-32SP062	CW
1		CCW
2	MRE-G□SP062	CW
3		CCW

Sensor selection and sensor rotation direction are set to buffer memory address 702.

5.3.3 Decimal point position setting

The decimal point position is set for the display area of the VS-T62 external setting unit. This setting does not affect the binary data used for the PC.

The decimal point position is determined by the number of digits after the decimal point.

This setting is effective only when using the VS-T62.

The relationship between the setting number and the decimal point position is as below.

0: 123456

1: 12345.6

2: 1234.56

3: 123.456

4: 12.3456

5: 1.23456

The decimal point position is set to buffer memory address 703.

5.3.4 Scale length and minimum current position value setting

This section explains how to set the scale length and minimum current position value.

Only the scale length or the minimum current position value can be set. Refer to 1.2 for definitions of the scale length and the minimum current position value.

POINT

The detection range is determined by the scale length and the minimum current position value. Therefore, consider the relationship of these items.

The scale length is set to buffer memory addresses 704 (L) and 705 (H).

The minimum current position value is set to buffer memory addresses 706 (L) and 707 (H).

Effect on parameter settings:

When either the scale length or the minimum current position value is set, be sure to set the parameters that affect the distance again.

Function	No.	Address	Item
Positioning function	53	714(L), 715(H)	Overshoot amount
	54	716(L), 717(H)	Medium-speed zone
	55	718(L), 719(H)	Low-speed zone
	56	720(L), 721(H)	Stop zone
	57	722(L), 723(H)	In-position zone
	58	724(L), 725(H)	Upper limit value
	59	726(L), 727(H)	Lower limit value
Current position detection function	68	736(L), 737(H)	Permissible current position change amount
	69	738(L), 739(H)	Permissible correction amount
	71	741(L), 742(H)	Current position preset value 1 for FWD
	72	743(L), 744(H)	Current position preset value 1 for RVS
	73	745(L), 746(H)	Current position preset value 2 for FWD
	74	747(L), 748(H)	Current position preset value 2 for RVS

5.3.6 Current position value setting

This section explains how to set the current position value.

The 'current position value' setting consist of designating a numeric value which corresponds to a given machine position.

For example, if the machine is moved to its 100 mm position (or any desired position), the 'current position' setting which corresponds to that position would be designated as '10000' (when resolution is 0.01). The 'current position' setting provides a reference value on which the detection range ([minimum current position value] to [minimum current position value + scale length - 1]) is based.

Setting sequence:

(a) Move the machine to the desired setting position.

(b) Turn the PC CPU signal (Y10) OFF.

(c) Set '1' to initial setting (INIT) and write select bit of buffer memory address 700 (sequence mode selection).

(Writing to buffer memory addresses 709 and 710 is now enabled.)

(d) Write the setting value to buffer memory addresses 709 (L) and 710 (H). (At this time, current position value setting is not completed.)

(e) Turn the PC CPU signal (Y10) ON.

(f) Writing is completed when operation status (X1) has turned ON.

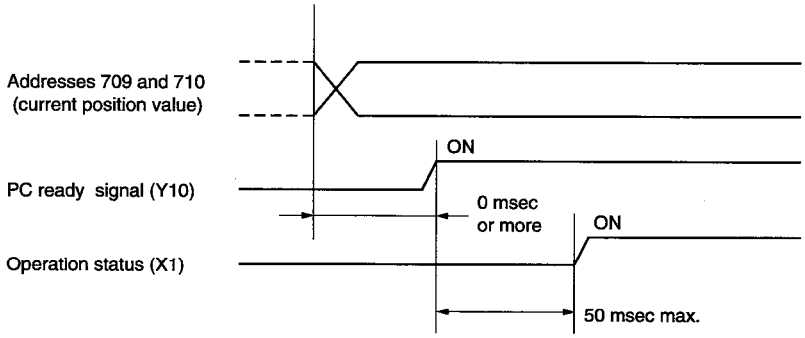

Other initial settings can be written simultaneously when writing the current position value.

REMARKS

Depending on the minimum unit of current position change (resolution), there may be cases in which the current position value will vary slightly from the current position setting value. When the current position value is between the minimum units, the larger value will be selected.

Ex.) Current position value change: 0→7→15.

Current position setting value: 10

Because the current position setting value is between 7 and 15, the larger value of '15' will be designated as the current position value.

IMPORTANT

Current position value setting shall not exceed 10,000 times. If exceeding this, use current position preset function.

5.4 Parameter Settings

This section explains the parameters active for the A1S62LS's current position detection function.

Parameters are factory-set (default).

Set the parameters requiring any changes only.

When writing the parameters, set '1' to the corresponding bit of the buffer memory address 700 (sequence mode selection). Set '0' to other bits.

When sequence mode is selected, data stored in the buffer memory for data communication with the PC CPU is loaded to the A1S62LS when PC CPU signal Y10 turns ON.

REMARKS

The A1S62LS parameters consist of the 'limit switch output function' and 'positioning function' parameters. Only the parameters used for the current position detection function are explained here. For details regarding the limit switch output function parameters, refer to section 6.4, and for the positioning function parameters, refer to section7.4. When the limit switch output and positioning functions are used jointly, parameter settings for both functions must be designated.

IMPORTANT

Writing to initial setting/parameter setting areas between addresses 702 and 750 shall not exceed 10,000 times.

5.4.1 Parameter list

No.	Address	Item	Contents	Setting data	Default
50	711	Function	Designates 'Current position detection function only', 'limit SW output function only' or limit SW output function & positioning function.	0: Limit SW output function & positioning function 1: Limit SW output function only 2: Current position detection function only	2
68	736(L) 737(H)	Permissible current position change amount	Designates the permissible amount of current position change which can occur every 20 msec. If this amount is exceeded, an error will occur.	0 to 999999	999999
69	738(L) 739(H)	Permissible correction amount	Designates the permissible amount of correction which can occur when the current position preset function is executed. If this amount is exceeded, an error will occur.	0 to 999999	999999
70	740	Current position preset function	Designates whether or not to use current value preset function, and the method when using it.	0: INVALD 1: By Parameter 2: By Buffer memory 3: By Sequence	0
71	741(L) 742(H)	'FWD current position preset 1' value	Designates the 'current position preset 1' setting value to be used when the current position preset function is executed in the forward direction.	Minimum current position value to [minimum current position value + scale length -1].	0
72	743(L) 744(H)	'RVS current position preset 1' value	Designates the 'current position preset 1' setting value to be used when the current position preset function is executed in the reverse direction.	Minimum current position value to [minimum current position value + scale length -1].	0
73	745(L) 746(H)	'FWD current position preset 2' value	Designates the 'current position preset 2' setting value to be used when the current position preset function is executed in the forward direction.	Minimum current position value to [minimum current position value + scale length -1].	0
74	747(L) 748(H)	'RVS current position preset 2' value	Designates the 'current position preset 2' setting value to be used when the current position preset function is executed in the reverse direction.	Minimum current position value to [minimum current position value + scale length -1].	0
75	749	Speed gate time	Selects the desired speed gate time to detect the change in amount of sensor travel speed in binary value or the sensor's rotation speed (rpm). Note When using the MRE-G□ type ABSOCODER sensor, the rotation speed (rpm) is 1/gear ratio (□/32).	0: 4 ms 1: 8 ms 2: 16 ms 3: 32 ms 4: 64 ms 5: Rotation speed (rpm)	0
76	750	Speed sampling time	Selects the speed sampling time for the speed gate time selected by address 749. However, this setting is invalid when '5: rotation speed (rpm)' is selected.	0: Same as speed gate time 1: 1/2 of speed gate time 2: 1/4 of speed gate time	0

5.4.2 Function selection

This section explains how to set the funcion selection.

The A1S62LS consists of 3 major functions: The 'limit switch output function', the 'positioning function' and 'current position detection function'.

The function which is to be used is designated by this 'function selection' parameter setting.

The setting selections are as follows:

0: For both 'limit SW output function' and 'positioning function' (of the 16 channel outputs, channels 0 - 7 are used for the limit SW output function, and channels 8 - 15 are used for the positioning function).

1: Limit SW output function only (all 16 of the channel outputs are used for the limit SW output function).

2: Current position detection function only (all of the channel outputs turn OFF).

The 'function selection' setting is made at address 711.

5.4.3 Permissible current position change amount setting

This section explains how to set the permissible current position change amount.

The A1S62LS executes a position detection operation every 20 msec, and the difference between the currently detected position and the previously detected position is calculated.

If this value exceeds the permissible change amount, the 'excessive current position change detection (X6)' and the 'error detection (X7)' signals will turn ON.

The 'permissible current position change amount' setting is designated at address 736 (L) and 737 (H).

(1) Turn Y16 ON by the sequence program to reset 'excessive current position change detection'.

(2) A1S62LS operation will continue even if an excessive current position change amount occurs.

(3) The 'excessive current position change detection (X6)' and 'error detection (X7)' signals will not turn ON when the current position value is changed by the 'current position preset input' or when the current position value is designated by initial setting.

5.4.4 Permissible correction amount setting

This section explains how to set the permissible correction amount.

The 'permissible correction amount' is the amount of current position correction which is allowed when the 'current position preset input' function is executed. If this permissible amount is exceeded, the 'excessive correction amount detection (X5)' and the 'error detection (X7)' signals will be turned ON by the A1S62LS.

The 'permissible correction amount' setting is designated at address 738 (L) and 739 (H).

(1) Turn Y16 ON by the sequence program to reset 'excessive correction amount detection' and 'error detection'.

(2) A1S62LS preset operation will occur, even if an excessive correction amount is detected.

5.4.5 Current position preset function setting

This section explains how to set the current position preset function.

This setting determines whether or not to execute the current position preset and the device if executing.

0: Disabled

1: Parameter format

2: Buffer memory format

3: Sequence format

The current position preset function is set to buffer memory address 740.

5.4.6 Current position preset value setting

The current position preset value is used when changing the machine current position to the preset value by the current position preset input. (Any from 1 to 3 must be selected for the current position preset function of address 740.)

The table below shows the addresses and their current position preset values.

No.	Address	Contents
71	741(L) 742(H)	FWD current position preset value 1
72	743(L) 744(H)	RVS current position preset value 1
73	745(L) 746(H)	FWD current position preset value 2
74	747(L) 748(H)	RVS current position preset value 2

Refer to 5.1.2 for details of the current position preset function.

(1) Settings exceeding the detection range between [minimum current position value and (minimum current position value + scale length -1)] are not accepted.

(2) When the detection range is changed after the preset value has been set, the preset value remains the same even if this is out of the detection range.

If preset operation is executed in this state, an error (error No. 50) will occur and current position preset cannot be completed successfully.

REMARKS

Depending on the minimum unit of current position change (resolution), there may be cases in which the current position value will vary slightly from the preset value. When the preset value is between the minimum units, the larger value will be selected.

Ex.) Current position value change: 0→7→15.

Preset value: 10

Because the preset value is between 7 and 15, the larger value of '15' will be designated as the current position value.

5.4.7 Speed gate time and speed sampling time setting

This section explains how to set the speed gate time and speed sampling time.

This setting determines the contents of the data stored in the speed storage area of buffer memory addresses 668 (L) and 669 (H).

The speed gate time is set to buffer memory address 749.

Speed sampling time is set to buffer memory address 750.

Setting contents are as below.

No.	Address	Item	Contents	Setting data
75	749	Speed gate time	Selects the desired speed gate time to detect the change in amount of sensor travel speed in binary value or the sensor's rotation speed (rpm). Note When using the MRE-G□ type ABSOCODER sensor, the rotation speed (rpm) is 1/gear ratio (□/32).	0: 4 ms 1: 8 ms 2: 16 ms 3: 32 ms 4: 64 ms 5: Rotation speed (rpm)
76	750	Speed sampling time	Selects the speed sampling time for the speed gate time selected by address 749. However, this setting is invalid when '5: rotation speed (rpm)' is selected.	0: Same as speed gate time 1: 1/2 of speed gate time 2: 1/4 of speed gate time

(1) When storing binary value (Any from 0 to 4 is selected by 'speed gate time'.)

The sensor's rotation speed is stored as sensor binary value.

This means that the change in amount of speed gate time is stored in the absolute value.

The graph below shows the gate time and the sampling time.

[When sampling time = 1/2 of gate time]

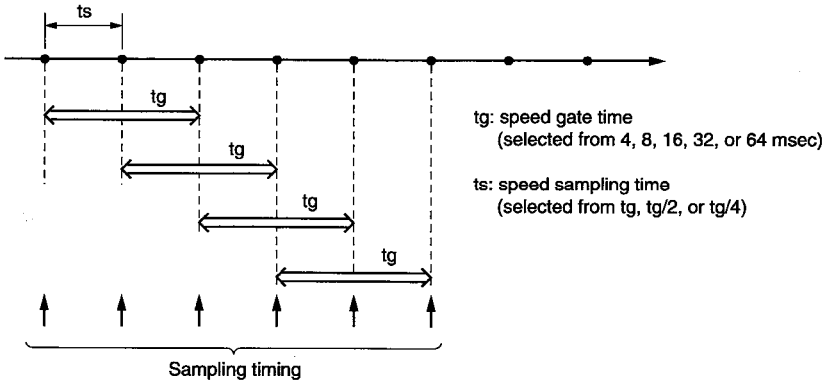

The next gate time starts when the current sampling has finished.

(2) When storing rotation speed ('5' is selected by 'speed gate time'.)

This area stores the rotation speed (rpm) internally calculated according to the current position detected by the ABSOCODER sensor.

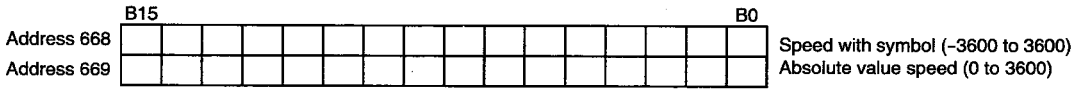

REMARKS

(1) Speed with symbol (address 668) is set regarding the rotation direction set by address 702 (sensor selection/sensor rotation direction) as 'positive'.

'Negative' rotation speed is stored as complement of '2'.

(2) When using the MRE-G□ type ABSOCODER sensor, the rotation speed to be stored is 1/gear ratio (□/32).

5.5 Programming

This section explains how to create the sequence program using the A1S62LS.

5.5.1 Program creation precautions

(1) The A1S62LS is a special function module containing 32 exclusive input and output points.

(2) In response to 'FROM/TO' instructions, the first input/output No. of the A1S62LS's slot will be designated.

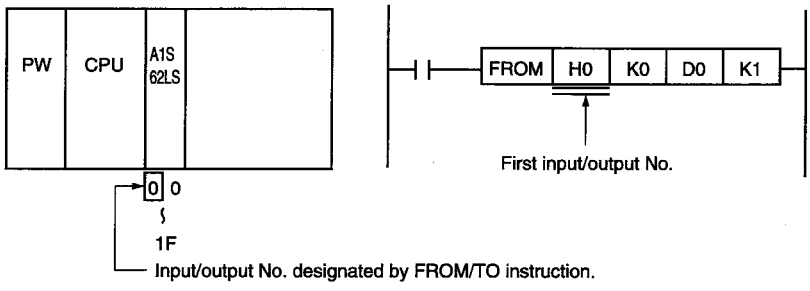

(3) A1S62LS control begins when the following signals turn ON:

Y10: PC ready signal.

Y11: Positioning START signal.

When the 'Y12' positioning STOP signal is OFF, the 'Y11' signal is detected at its leading edge.

Y15: 'Limit switch output enabled' signal.

(4) The following programming methods are used to stop A1S62LS operation:

(a) To stop all A1S62LS control: Y10 signal OFF.

(b) To stop control of only the limit SW output function: Y15 signal OFF.

(c) To stop control of only the positioning function: Y12 signal ON

(STOP occurs when the leading edge of the Y12 signal is detected.)

(5) Error Reset:

It takes the A1S62LS 12 msec to detected the Y16 (error reset) signal after it has been turned ON. Therefore, if the ON period of the Y16 signal is less than 12 msec, it may not be detected, and the 'error detection' signal will not go OFF.

To prevent this, the following programming method should be used.

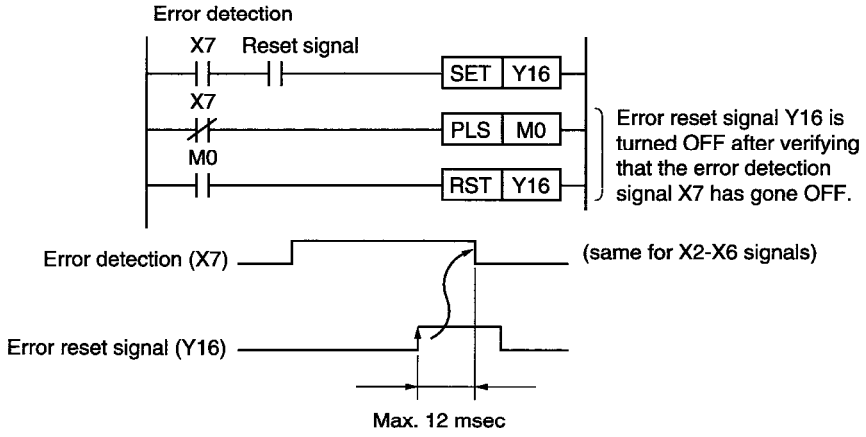

5.5.2 Initial setting and parameter setting data write program

Program example for writing the initial setting and parameter data to the A1S62LS buffer memory is given below.

Example 1):

Example of writing the setting data stored in the PC CPU file register to the initial setting area while setting the current position.

Conditions

(1) The following signal assignments are used to control the A1S62LS.

A1S62LS online command ····· XF0

Initial setting write command ····· XF1

Sequence mode answerback storage register ····· D0

(2) The initial setting data should be stored in the file register in advance.

File register		Buffer memory		
R0	702	Sensor rotation direction		[90]
R1	703	Decimal point position		[91]
R2	704	(L)	Scale length	[92]
R3	705	(H)		
R4	706	Not used		
R5	707	(L)	Minimum current position value	[93]
R6	708	(H)		
R7	709	(L)	Current position value	[94]
R8	710	(H)		

(3) Move the machine to the reference position before writing data with this sequence program.

Program Example

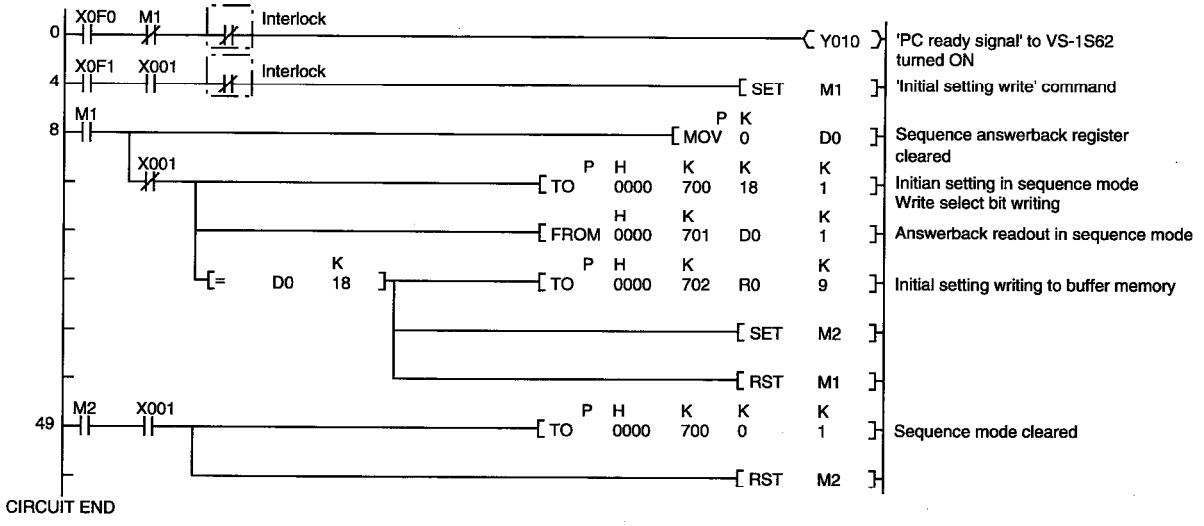

Example 2):

Example of writing the setting data stored in the PC CPU file register to the parameter setting area

Conditions

(1) The following signal assignments are used to control the A1S62LS.

A1S62LS online command ····· XF0

Parameter setting write command ····· XF1

Sequence mode answerback storage registe ····· D0

(2) The parameter setting data should be stored in the file register in advance.

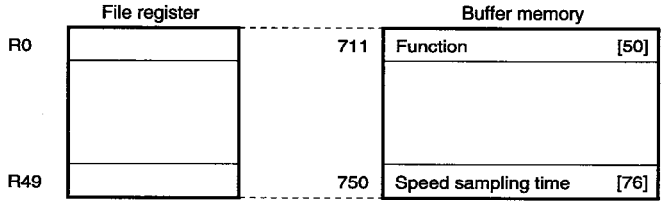

Program Example

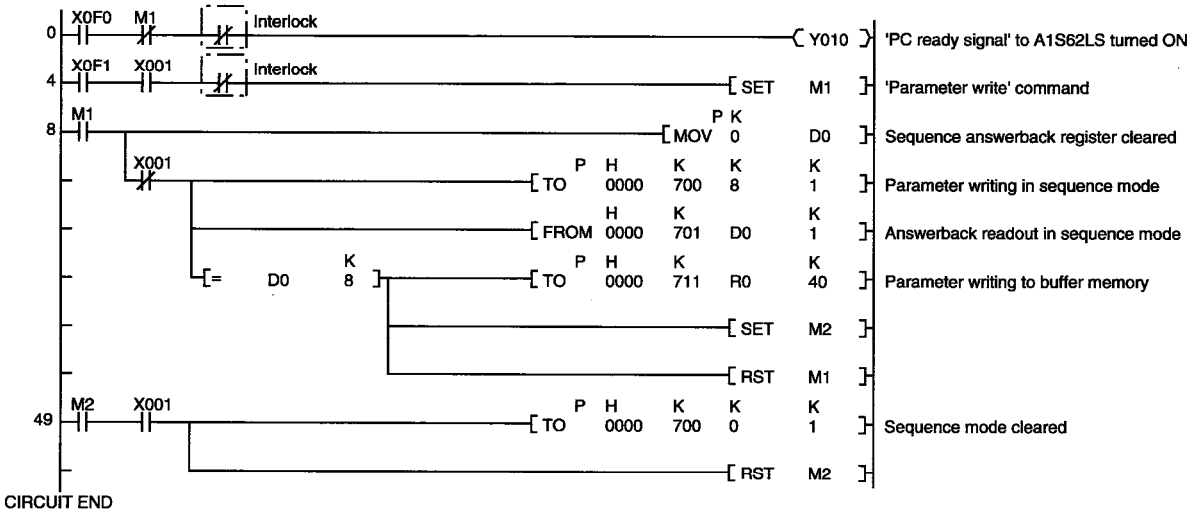

5.5.3 Program for current position detect display

A program example for the current position detect display is given below.

Conditions

(1) The following signal assignments are used to control the A1S62LS:

A1S62LS 'online' command ·····X32

Current position (scaling binary) storage register ·····D0, D1, D2, D3

Current position (scaling binary) output to external display area ·····Y70 - Y83

External output signal for symbols ·····Y84

(2) The current position detect display is executed every 200 msec.

Program Example

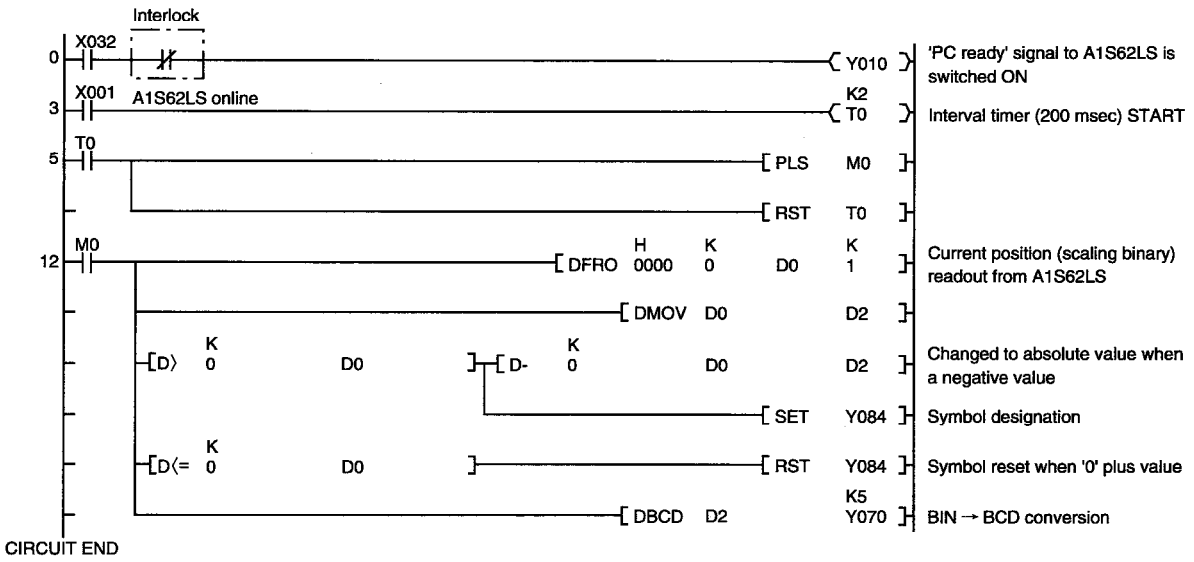

Explanation

(1) When online, A1S62LS is turned ON by the X1 signal.

(2) The current position value (scaling binary) is stored at the buffer memory as follows:

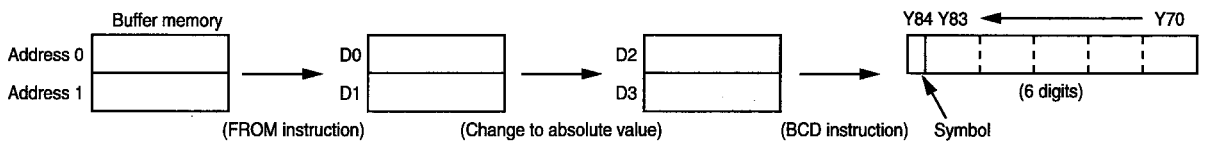

5.5.4 Program for error code readout and reset

A program example for the error code readout and error reset operation which is used when an A1S62LS 'error detection' occurs is given below.

Conditions

(1) The following signal assignments are used to control the A1S62LS:

Output for the external BCD display ·····Y80 - Y8F

External output signal for error detect ·····YA0

External output signal for sensor error detect ···YA1

A1S62LS 'online' command·····X32

Error reset signal ·····X50

Program Example

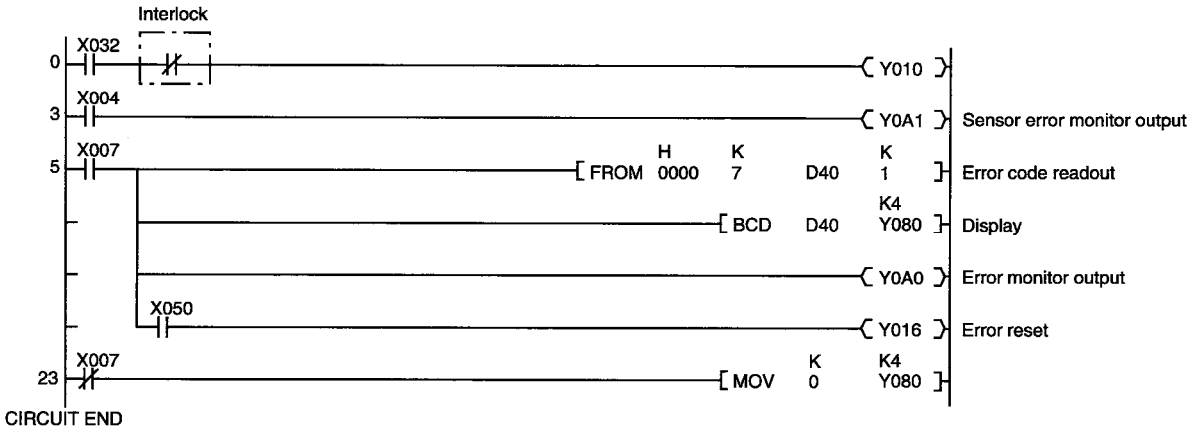

Explanation

(1) The X4 signal turns ON when an sensor error occurs.

(2) The X7 signal turns ON when an error occurs.

(3) The error code is stored at address 7 of the buffer memory as a binary value.

(4) A1S62LS errors are reset when the Y16 signal is turned ON.

(5) The error display is cleared when an error reset occurs.

5.5.5 Remote I/O station programming

The master station (ACPU) programming which is required when the A1S62LS is installed at a remote station is explained below.

(1) Notes on programming:

There are two ACPU input/output control modes: the 'direct' mode, and the 'refresh' mode. However, for data communication with a remote I/O station, the 'refresh' mode is used after the END (FEND) instruction is executed.

Please note the following precautions when the A1S62LS is installed at a remote I/O station. For details regarding data link specifications, refer to the User's Manual for the data link module.

(a) There is a time lag (response delay) in the communication of control data between master and remote I/O stations which must be allowed for when specifying the system.

Therefore, care must be taken when designating the control timing.

(b) The following instructions are used for data communication with the remote I/O station A1S62LS:

Data writing from the master station to the remote I/O station A1S62LS: RTOP instruction.

Data reading from the remote I/O station A1S62LS to the master station: RFRP instruction.

Data communication between the master station CPU and the A1S62LS occurs at the 'link register (W)'. Therefore, when required, a processing program should be included just after the RFRP instruction where the link register data is to be transferred to another device, or just prior to the RTOP instruction where the transfer data is to be transferred to the link register.

(c) The RTOP and RFRP commands cannot be executed simultaneously (within 1 scan) for a single remote I/O station A1S62LS. (If there are two A1S62LS installed at the remote I/O station, the above instructions can be executed simultaneously provided that the RTOP instruction is for the No. 1 A1S62LS, and the RFRP instruction is for the No. 2 A1S62LS.)

For this reason, the signals shown on the following page must be integrated with the interlock conditions.

Although all the input/output signals are assigned from the master station, in the following example they are shown as signals for the X0-1F, Y0-1F devices.

(d) Control signals to A1S62LS:

Depending on the relationship between the master station's scan time and the link scan time, the Y□□ signal sent to the remote I/O station may not be output as PLS Y □□.

Due to the 'refresh' mode which is used after data communication between the master station and the remote I/O station has been ended by the END (FEND) instruction, the pulse output which executes the RST instruction (after SET instruction is executed) cannot be used.

Signal Direction: PC CPU → A1S62LS		Signal Direction: A1S62LS → PC CPU	
Device No.	Signal Name	Device No.	Signal Name
Y0 - YC	User operation prohibited	X10 - X1C	User operation prohibited
YD	Signal for turning X1D OFF.	X1D	Comes ON when RFRP/RTOP instructions cannot be executed due to an error at a special function module.
YE	When RFRP instruction is executed (from master station CPU to Link module transfer), master station CPU is turned ON. After verifying X1E ON status, a reset at the user program is required.	X1E	Remote station A1S62LS comes ON while RFRP instruction is being processed.
YF	When RTOP instruction is executed (from master station CPU to Link module transfer), master station CPU is turned ON. After verifying X1F ON status, a reset at the user program is required.	X1F	Remote station A1S62LS comes ON while RTOP instruction is being processed.

When RFRP/RTOP instructions cannot be executed due to an error at a special function module.

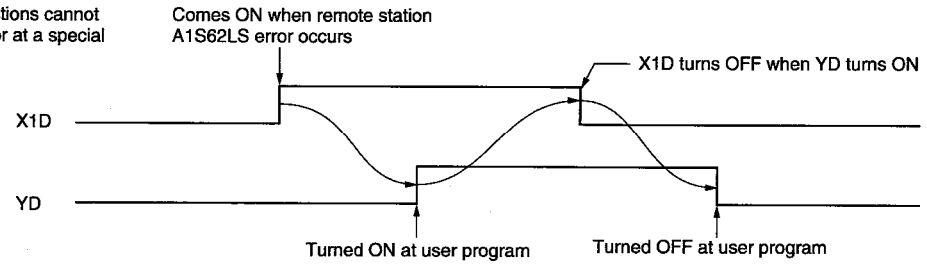

When RFRP instruction is executed

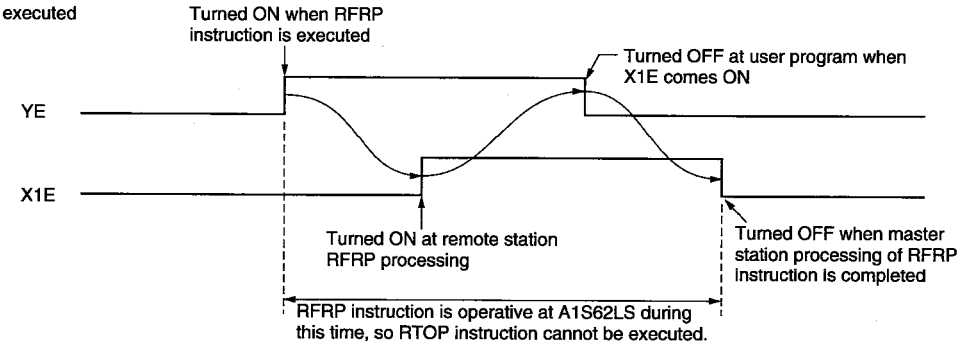

When RTOP instruction is executed

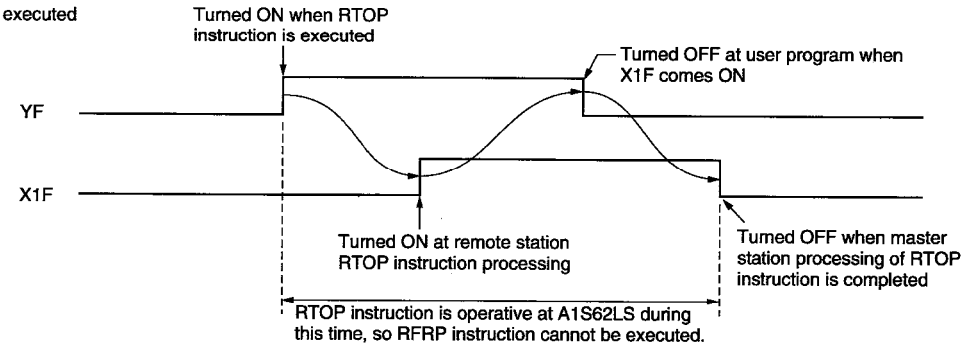

5.6 Operation

This section explains operation of the current position detection function.

Set '0' to all bits of the buffer memory address 700 (sequence mode selection).

When using the VS-T62 (external setting unit), set the manual mode to RUN.

This state is called 'RUN mode'.

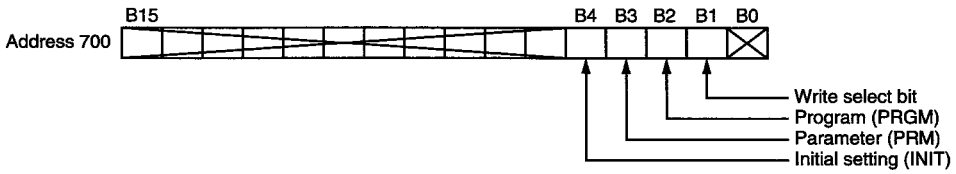

(1) The mode is cleared to RUN mode when the power supply is turned ON or the PC CPU is reset.

(2) RUN mode can prohibit the mode to be changed from the sequence program in manual mode.

Turn Y19 of the sequence program ON, and mode change will not be accepted.

MEMO

6. LIMIT SWITCH OUTPUT FUNCTION

6.1 Function Description

6.1.1 Limit switch output function

With this function, the machine's travel amount is detected by the absolute value of the ABSOCODER sensor, and external ON/OFF signal outputs are used in place of conventional limit switches.

As shown in figure 6.2, the ON/OFF positions can be designated at any of the points where the ABSOCODER sensor's detection occurs.

When the ABSOCODER sensor is rotated by a motor, etc., the sensor's rotational position is compared with the pre-designated ON/OFF position settings, and ON/OFF signals are output externally.

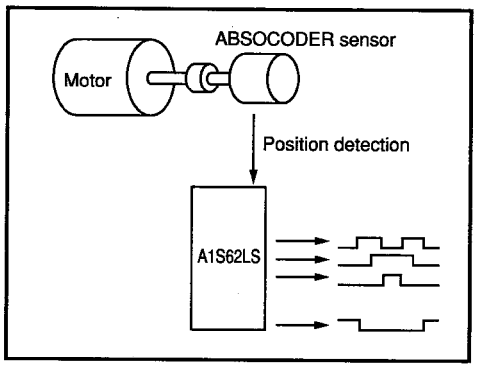

Fig. 6.1 A1S62LS operation

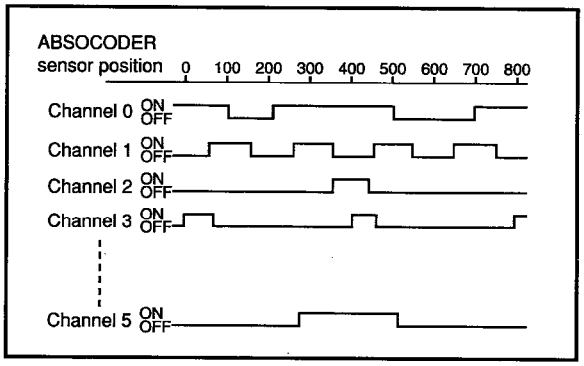

Fig. 6.2 Limit Switch Example

(1) Up to 16 channels (Channels 0 - 15) can be used for limit switch output.

When used jointly with the positioning function (described in section 7), only 8 channels (channels 0 - 7) may be used for limit switch output.

(2) Up to 9 programs (program Nos. 0 - 8) containing each channel's ON/OFF data settings can be registered. The programs to be used are then selected when operation is to occur.

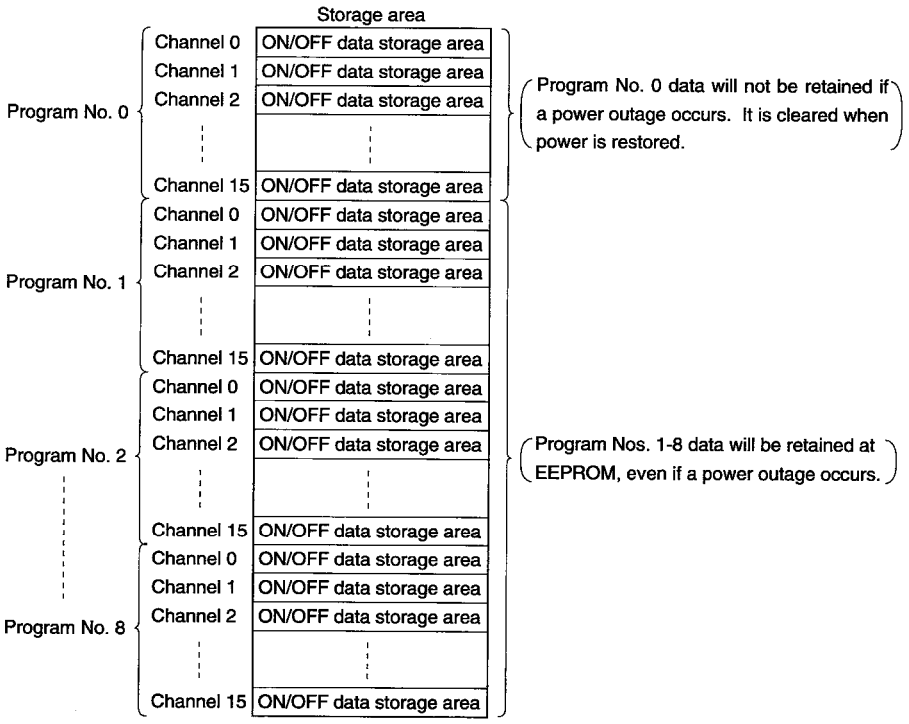

(3) The program No. to be used is designated by the sequence program which writes that program No. at the buffer memory's 'address 9' setting area.

(4) The ON/OFF settings for program No. 0 can either be designated by the sequence program.

Refer to section 6.5 for details regarding the setting procedure.

(5) The minimum permissible width of ON and OFF zones is according to the position detection spacing of the ABSOCODER sensor being used.

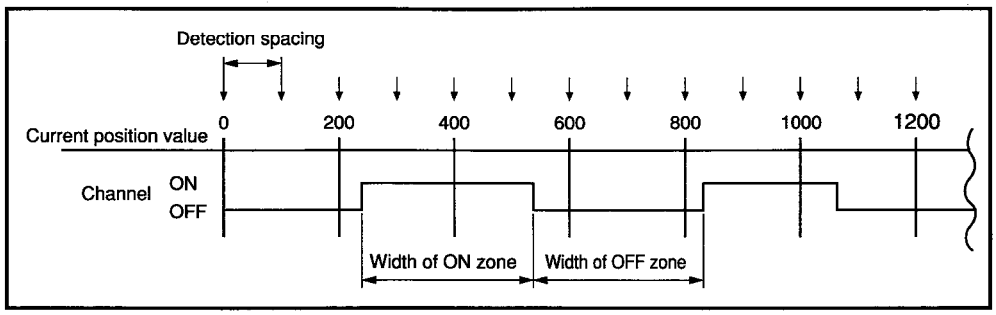

Position data sampling occurs every 1 msec at the A1S62LS.

The detected position is then compared with the designated ON/OFF settings, with limit switch output being executed accordingly.

Therefore, if the machine exceeds a given permissible speed, position detection at each of the minimum scale length units will become impossible, and the external output of ON and OFF signals as designated will also be impossible.

In such cases, the width of the ON and OFF signal zones must be increased. The following formula is used to calculate the permissible speed:

Permissible speed = Minimum scale length unit/Sampling time × Width of signal zone/Minimum scale length unit

Example:

When 'minimum scale length unit' is 0.01 mm, and 'width of signal zone' is 0.1 mm:

Permissible speed = 0.01 mm/1 msec × 0.1 mm/0.01 mm

= 0.1/1 × 100 = 100 mm/sec

(6) Up to 10 ON/OFF data settings can be designated for each A1S62LS channel. This is referred to as the 'multi-dog setting function'.

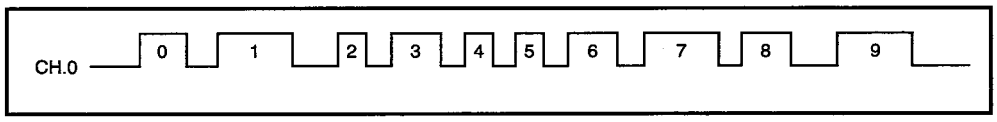

Numerals indicate the multi-dog Nos.

6

6.1.2 Current position preset function

Refer to 5.1.2 for the A1S62LS's current position preset function.

6.2 Pre-Operation Setting Sequence

This section explains the setting sequence for the limit switch function.

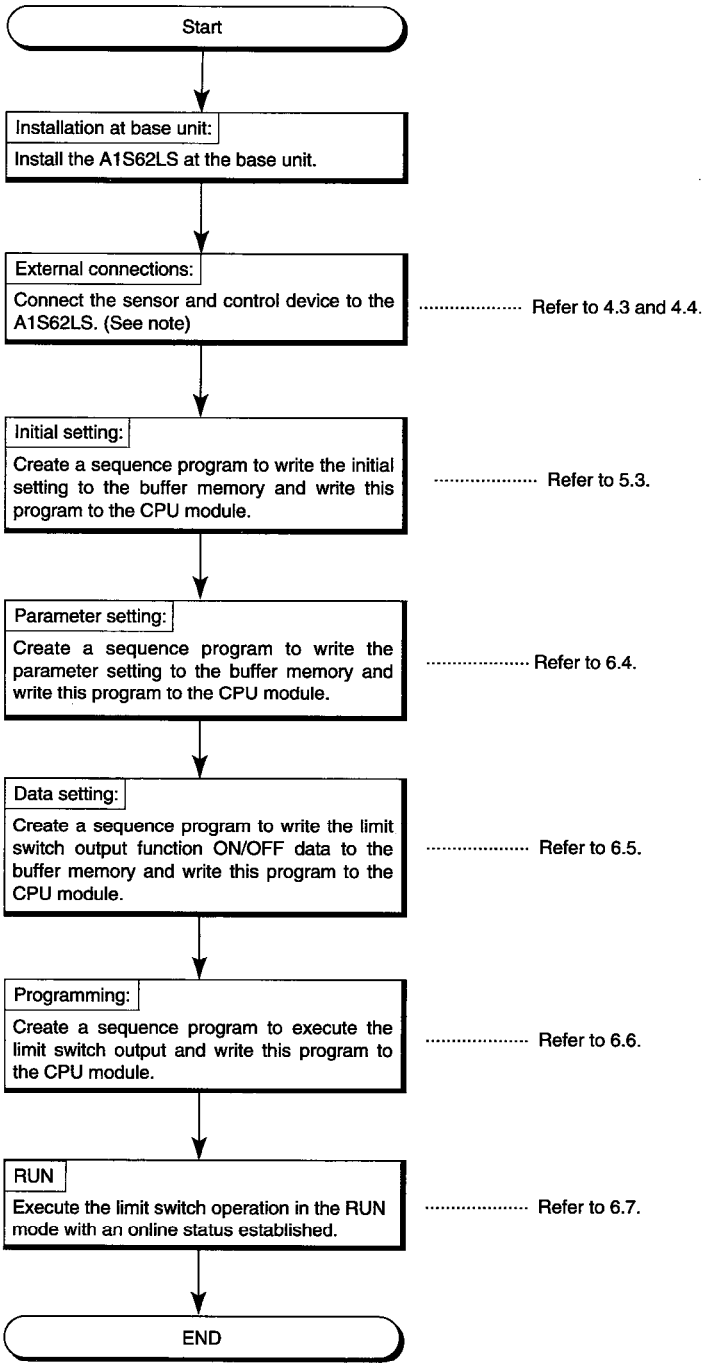

REMARKS

Settings other than current position setting can be done even when the ABSOCODER sensor is not connected.

6.3 Initial Settings

Refer to 5.3 for the A1S62LS's initial settings.

The initial settings are commonly used for the current position detection function, limit switch output function, and positioning function.

6.4 Parameter Settings

This section explains the parameter settings for the A1S62LS's limit switch output function.

Parameters are factory-set (default).

Set the parameters requiring any changes only.

When writing the parameters, set '1' to the corresponding bit of the buffer memory address 700 (sequence mode selection). Set '0' to other bits.

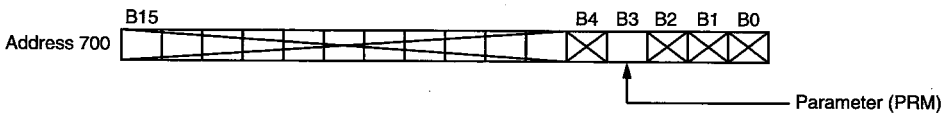

The data written to the buffer memory for data communication with the PC CPU is loaded to the A1S62LS when the PC ready signal (Y10) is turned ON in sequence mode.

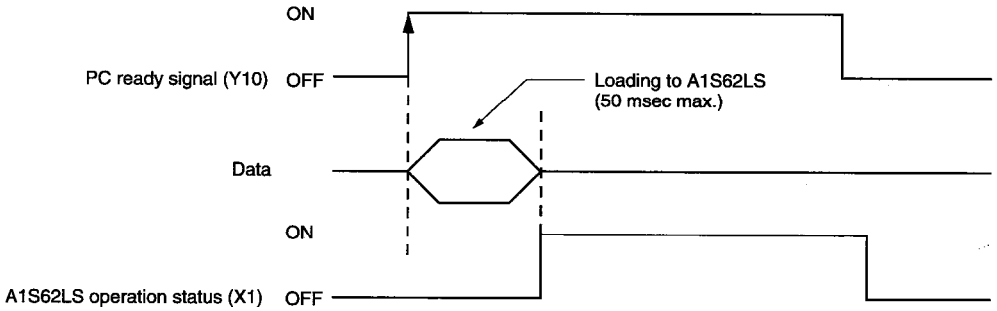

REMARKS

Some parameters of the A1S62LS are for the limit switch output function and others are for the positioning function.

This section explains the limit switch output function parameters.

Refer to 7.4 for details of positioning function parameters.

When using both the limit switch output function and the positioning function, set both parameters.

IMPORTANT

Writing to initial setting/parameter setting areas between addresses 702 and 750 shall not exceed 10,000 times.

6.4.1 Parameter list

No.	Address	Item	Contents	Setting data	Default
50	711	Function	Designates 'Current position detection function only', 'limit SW output function only' or limit SW output function & positioning function.	0: Limit SW output function & positioning function 1: Limit SW output function only 2: Current position detection function only	2
65	733	Number of protected channels	Designates the number of protected channels where setting changes cannot be made, even if in the PRGM mode.	0-16 (0: None)	0
66	734	Offline output status (For TEST mode, and INIT, PRM, and PRGM modes)	Designates the limit SW output status when offline.	Mode / Data: TEST Mode / INIT, PRM, PRGM, Modes 0: All-points OFF / All-points OFF 1: HOLD / HOLD 2: All-points OFF → limit SW output / All-points OFF 3: HOLD → limit SW output / HOLD Note: '→' indicates limit SW output executed by pressing [SET] key.	0
67	735	Offline output status (for RUN mode)	Designates the limit SW output status when offline.	0: All-points OFF 1: Hold	0
68	736(L) 737(H)	Permissible current position change amount	Designates the permissible amount of current position change which can occur every 20 msec. If this amount is exceeded, an error will occur.	0 - 999999	999999
69	738(L) 739(H)	Permissible correction amount	Designates the permissible amount of correction which can occur when the current position preset function is executed. If this amount is exceeded, an error will occur.	0 - 999999	999999
70	740	Current position preset function	Designates whether or not to use current value preset function, and the method when using it.	0: INVALD 1: By Parameter 2: By Buffer memory 3: By Sequence	0
71	741(L) 742(H)	'FWD current position preset 1' value	Designates the 'current position preset 1' setting value to be used when the current position preset function is executed in the forward direction.	Minimum current position value to [minimum current position value + scale length -1]	0
72	743(L) 744(H)	'RVS current position preset 1' value	Designates the 'current position preset 1' setting value to be used when the current position preset function is executed in the reverse direction.	Minimum current position value to [minimum current position value + scale length -1]	0
73	745(L) 746(H)	'FWD current position preset 2' value	Designates the 'current position preset 2' setting value to be used when the current position preset function is executed in the forward direction.	Minimum current position value to [minimum current position value + scale length -1]	0
74	747(L) 748(H)	'RVS current position preset 2' value	Designates the 'current position preset 2' setting value to be used when the current position preset function is executed in the reverse direction.	Minimum current position value to [minimum current position value + scale length -1]	0
75	749	Speed gate time	Selects the desired speed gate time to detect the change in amount of sensor travel speed in binary value or the sensor's rotation speed (rpm). Note When using the MRE-G□ type ABSOCODER sensor, the rotation speed (rpm) is 1/gear ratio (□/32).	0: 4 ms 1: 8 ms 2: 16 ms 3: 32 ms 4: 64 ms 5: Rotation speed (rpm)	0
76	750	Speed sampling time	Selects the speed sampling time for the speed gate time selected by address 749. However, this setting is invalid when '5: rotation speed (rpm)' is selected.	0: Same as speed gate time 1: 1/2 of speed gate time 2: 1/4 of speed gate time	0

Addresses 712 - 732 are for the positioning function.

Setting these is not necessary when using the limit switch output function only.

6.4.2 Function selection

This section explains how to set the function selection.

The A1S62LS consists of 3 major functions: The 'limit switch output function', the 'positioning function' and 'current position detection function'.

The function which is to be used is designated by this 'function selection' parameter setting.

The setting selections are as follows:

0: For both 'limit SW output function' and 'positioning function' (of the 16 channel outputs, channels 0-7 are used for the limit SW output function, and channels 8-15 are used for the positioning function).

1: Limit SW output function only (all 16 of the channel outputs are used for the limit SW output function).

2: Current position detection function only (all of the channel outputs turn OFF).

The 'function selection' setting is made at address 711.

6.4.3 Number of protected channels

A 'protected channel' is a 'channel' where settings cannot be changed or deleted in PRGM mode (manual mode) of the VS-T62's external setting unit.

The relationship between the 'number of protected channels' setting value and the corresponding channel Nos. is as follows:

0: None

1: Channel No. 0

2: Channel Nos. 0 - 1

.

.

8: Channel Nos. 0 - 7

.

.

16: Channel Nos. 0 - 15

The 'number of protected channels' is set to buffer memory address 733.

(1) To cancel the protected channel setting, enter '0' as the setting value for address 733.

(2) When the protected status of a channel is cancelled and subsequent changes are made in that channel's limit switch output ON/OFF setting data, it will be necessary to re-designate the 'number of protected channels' setting in order to re-establish a protected status for that channel.

(3) This setting is effective only when the VS-T62 is connected.

6.4.4 Offline output status setting

The offline limit switch output status is designated at address 734 and 735. The setting content is as follows.

No.	Address	Contents	Setting data
66	734	Designates the limit SW output status when offline. (For TEST mode, and INIT, PRM, and PRGM modes)	Mode / Data: TEST Mode / INIT, PRM, PRGM, Modes 0: All-points OFF / All-points OFF 1: HOLD / HOLD 2: All-points OFF → limit SW output / All-points OFF 3: HOLD → limit SW output / HOLD Note: '→' indicates limit SW output executed by pressing [SET] key.
67	735	Designates the limit SW output status when offline. (For RUN mode)	0: All-points OFF 1: Hold

A 'HOLD' setting means that the most recent limit switch output status of each channel is maintained. However, if the power is turned OFF when an 'output HOLD' status exists, that limit switch output will be turned OFF when the power is turned back ON.

The limit switch output will also be turned OFF if the PC CPU is reset.

6.4.5 Permissible current position change amount setting

Refer to 5.4.3 for the permissible current position change amount setting.

6.4.6 Permissible correction amount setting

Refer to 5.4.4 for the permissible correction amount setting.

6.4.7 Current position preset function setting

Refer to 5.4.5 for the current position preset function setting.

6.4.8 Current position preset value setting

Refer to 5.4.6 for the current position preset value setting.

6.4.9 Speed gate time and speed sampling time setting

Refer to 5.4.7 for the speed gate time and speed sampling time setting.

6.5 Data Setting

The A1S62LS limit switch output data settings are explained below.

Limit switch output is set to program Nos. 0 to 8. Data setting sequence differs for program No. 0.

(1) Program No. 0

The contents of program No. 0 are not retained when power failure has occurred and when the PC has been reset.

Setting the limit switch output data to program No. 0 is carried out in RUN mode.

(2) Program Nos. 1 to 8

The contents of program Nos. 1 - 8 are retained even when power failure has occurred and when the PC has been reset.

Setting the limit switch output data to program Nos. 1 - 8 is carried out in PRGM mode.

6.5.1 Data setting

This section explains the setting data for the limit switch output function.

(1) The setting data must be designated for each channel, and consists of the 'number of multi-dogs', and the ON/OFF position data for each dog.

(2) The 'number of multi-dogs' setting is written as a binary value.

The ON/OFF position data is written as a 'scaling binary' value. Error '31' will be activated if dog positions are outside the detection range or if overlapping dogs exist. There are separate On setting and OFF setting areas for writing the dog position data. Discrimination between the ON and OFF writing areas is executed automatically according to the data content of dog No. 0.

There can be no mixing of ON and OFF areas on a single channel.

Examples of the ON area and OFF area position writing are given on the following line.

(a) 'ON Area' (Limit SW 'closed (a) contact' Operation) Dog Position Writing:

The numerical pairs used to write the ON position data are smaller than those used to write the OFF position data. If the numerical values for each dog are not written in order, beginning from the lowest and proceeding to the highest, error '31' will be activated. (The value of the dog No. 0 position must be smaller than that for dog No. 1.)

Channel No.	Switch Operation
0	Dog. No. 0 1 2 ON OFF Position 100 250 350 500 650 700

Address (decimal)		
12	3	Number of CH. 0 multi-dogs
13	100	Dog 0 ON position
14	0	
15	250	Dog 0 OFF position
16	0	
17	350	Dog 1 ON position
18	0	
19	500	Dog 1 OFF position
20	0	
21	650	Dog 2 ON position
22	0	
23	700	Dog 2 OFF position
24	0	
≈	≈	Ignored
53		

(b) 'OFF Area' (Limit SW 'open (b) contact' operation) Dog Position Writing:

The numerical pairs used to write the ON position data are larger than those used to write the OFF position data. If the numerical values for each dog are not written in order, beginning from the lowest and proceeding to the highest, error '31' will be activated.

Channel No.	Switch Operation
1	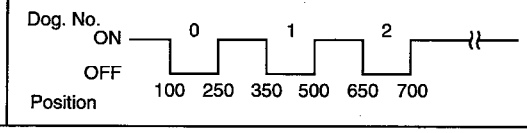

Address (decimal)		
53	3	Number of CH. 1 multi-dogs
54	250	Dog 0 ON position
55	0	
56	100	Dog 0 OFF position
57	0	
58	500	Dog 1 ON position
59	0	
60	350	Dog 1 OFF position
61	0	
62	700	Dog 2 ON position
63	0	
64	650	Dog 2 OFF position
65	0	

(3) The 'number of multi-dogs' setting range is as follows:

0-10 (only the first 4 bits of setting data are operative.)

If a setting of '0' is designated, the dog ON/OFF position data at that channel will be inoperative.

Any setting exceeding '10' will be processed as '10'.

(4) The setting range for the ON/OFF position data (scaling binary values) is as follows:

[Minimum current position value] to [Minimum current position value + scale length -1]

6.5.2 Data setting for program No. 0

The program No. 0 data settings are explained below.

The contents of program No. 0 are not retained when power failure has occurred and when the PC has been reset.

Setting the limit switch output data to program No. 0 is carried out in RUN mode.

Set '0' to all bits of buffer memory sequence mode selection address 700.

When using the VS-T62 external setting unit, set the manual mode to RUN.

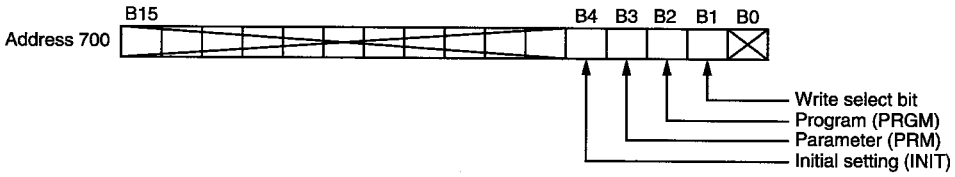

Normally, the reading/writing of program No. 0 data is executed via the buffer memory in response to FROM/TO instructions from the PC CPU. However, the reading/writing of this setting data can also be executed by key input. The program data processing sequence is shown in the flowchart below.

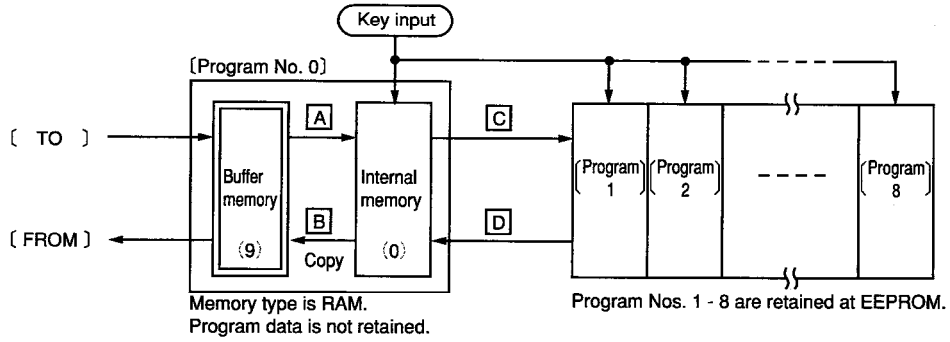

(1) As shown in the figure above the program No. 0 area is comprised of a 'buffer memory' and an 'internal memory'.

(2) Data which has been written from the PC CPU to the Buffer Memory in response to the 'TO' instruction, will automatically be written to the internal memory (operation [A] above) when the following occurs:

When Program No. 0 is selected while 'online'.

When 'offline → online' switching occurs with Program No. 0 selected.

Data which has been entered (in PRGM mode) to the internal memory area of Program No. 0 by key input or by the 'copy' [D] operation, will be lost if Program No. 0 is subsequently selected while in the RUN mode with an online status established, because the buffer memory data will be transferred to the internal memory at that time.

(3) If incorrect data setting exists when 'online' program No. 0 operation is executed in the RUN mode, an error (error '31') will occur.

When an error is detected, the limit switch output settings cannot be changed. When error '31' occurs, the limit switch output function will be as shown below, depending on the operation status in effect at the time.

Previous Status		Status After Error 31 is Detected
RUN mode	Online	Previous operation status will be continued.
	Offline	All-points OFF or HOLD (according to the parameter setting)

6.5.3 Writing program Nos.1 - 8

Writing to program Nos. 1 - 8 is explained below.

The contents of program Nos. 1 - 8 are retained even when power failure has occurred and when the PC has been reset.

Setting the limit switch output data to program Nos. 1 - 8 is carried out in PRGM mode.

Setting sequence is as below.

(1) Turn the PC ready signal (Y10) OFF.

(2) Set '1' to the corresponding bit and the write select bit of buffer memory sequence mode selection address 700. Set '0' to other bits.

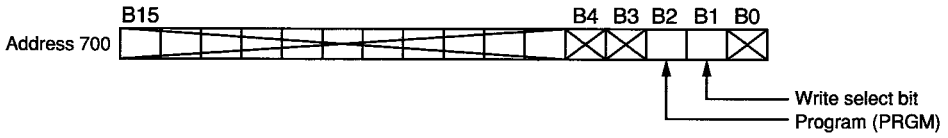

When using the VS-T62 external setting unit, set manual mode to RUN.

(3) Transfer the program data to the buffer memory limit switch ON/OFF data setting area (addresses 12 - 667).

(4) Write the program No. to the buffer memory program No. setting area (address No. 9).

(5) Turn the PC ready signal (Y10) ON.

(6) Writing is completed when the operation status (X1) has turned ON.

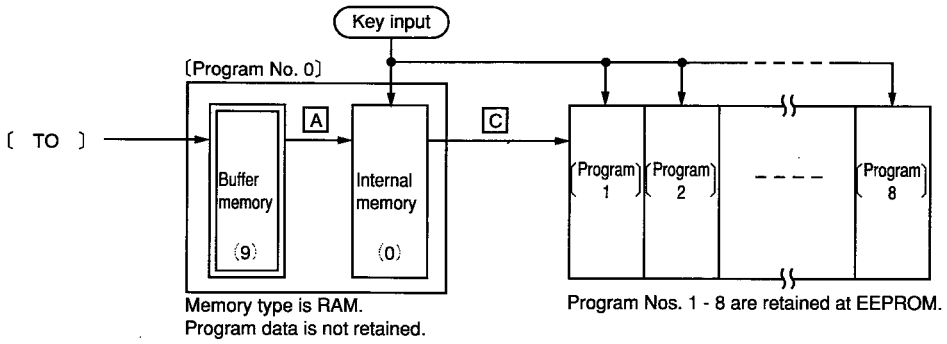

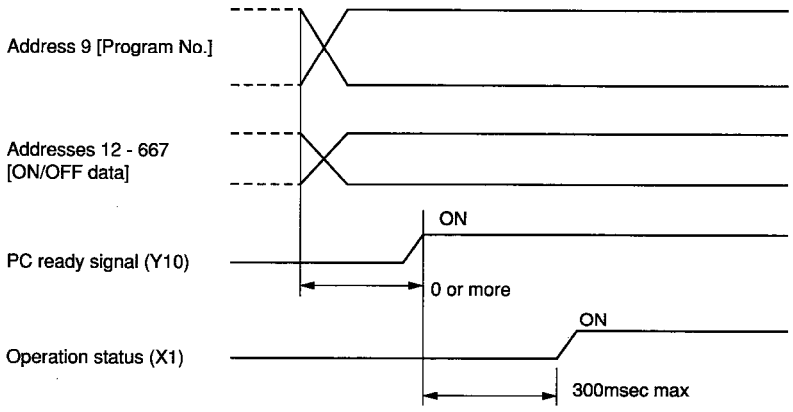

IMPORTANT

Writing to program Nos. 1 - 8 shall not exceed 10,000 times.

If exceeding this, use program No. 0.

6.5.4 Reading program Nos. 1 - 8

Reading program Nos. 1-8 is explained below.

Reading the limit switch output data from program Nos. 1 - 8 is carried out in PRGM mode.

Reading sequence is as below.

(1) Turn the PC ready signal (Y10) OFF.

(2) Set '1' to the corresponding bit of buffer memory sequence mode selection address 700. Set '0' to other bits.

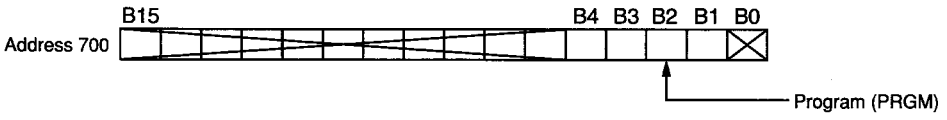

When using the VS-T62 external setting unit, set manual mode to RUN.

(3) Write the program No. to the buffer memory program No. setting area (address No. 9).

(4) Turn the PC ready signal (Y10) ON.

(5) Reading is completed when the operation status (X1) has turned ON.

(6) Transfer the program data using the FROM instruction from the buffer memory limit switch ON/OFF data setting area (addresses 12 - 667).

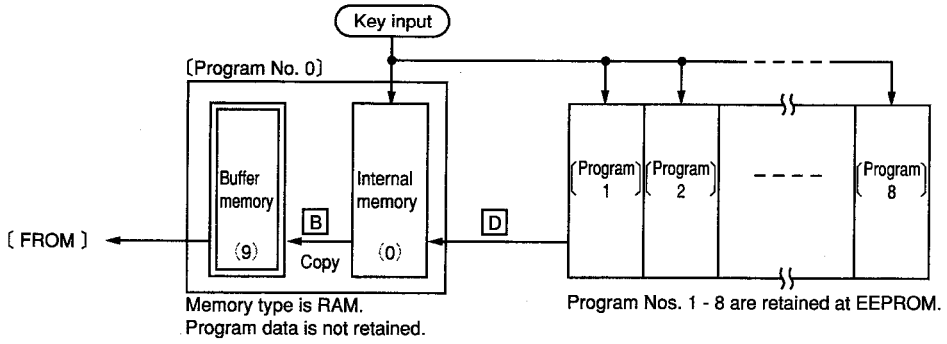

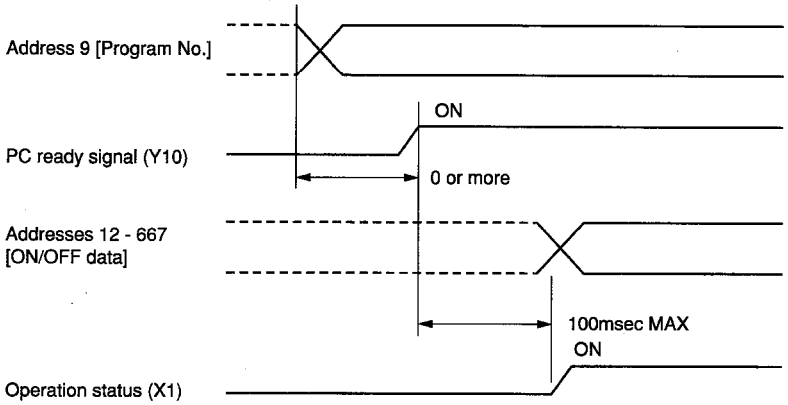

6.6 Programming

This section explains how to create the sequence program using the A1S62LS for limit switch output operation.

6.6.1 Initial setting and parameter setting data write program

Refer to 5.5.2 for the initial setting and parameter setting data write program.

6.6.2 Program for limit switch output function

Examples of programs used to start the limit switch output function and to change the program No. are provided in this section.

Example 1):

To start (by external input) the limit switch output function at one of the 3 registered programs (1 - 3), when the program settings have been designated in advance at the A1S62LS.

Conditions

(1) The following signal assignments are used to control the A1S62LS:

A1S62LS 'online' command ·····X32

Program No. 'write' command ·····X33

Program No. selection switch ·····X34 (For prgm No. 1)

·····X35 (For prgm No. 2)

·····X36 (For prgm No. 3)

Limit SW output function START command ···X37

Program No. storage register ·····D51

'Program switching answer' storage registe ···D52

(2) A1S62LS channels 0 - 11 are designated for use.

(3) The setting data of program Nos. 1 - 3 is designated in advance at the A1S62LS.

(4) The operation procedure is as follows:

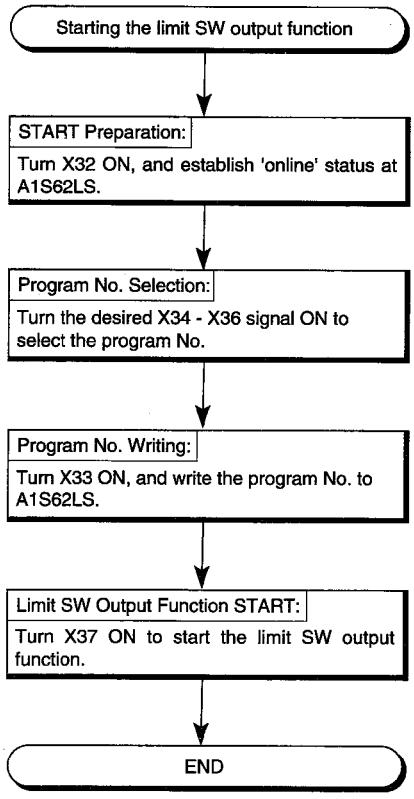

Program Example

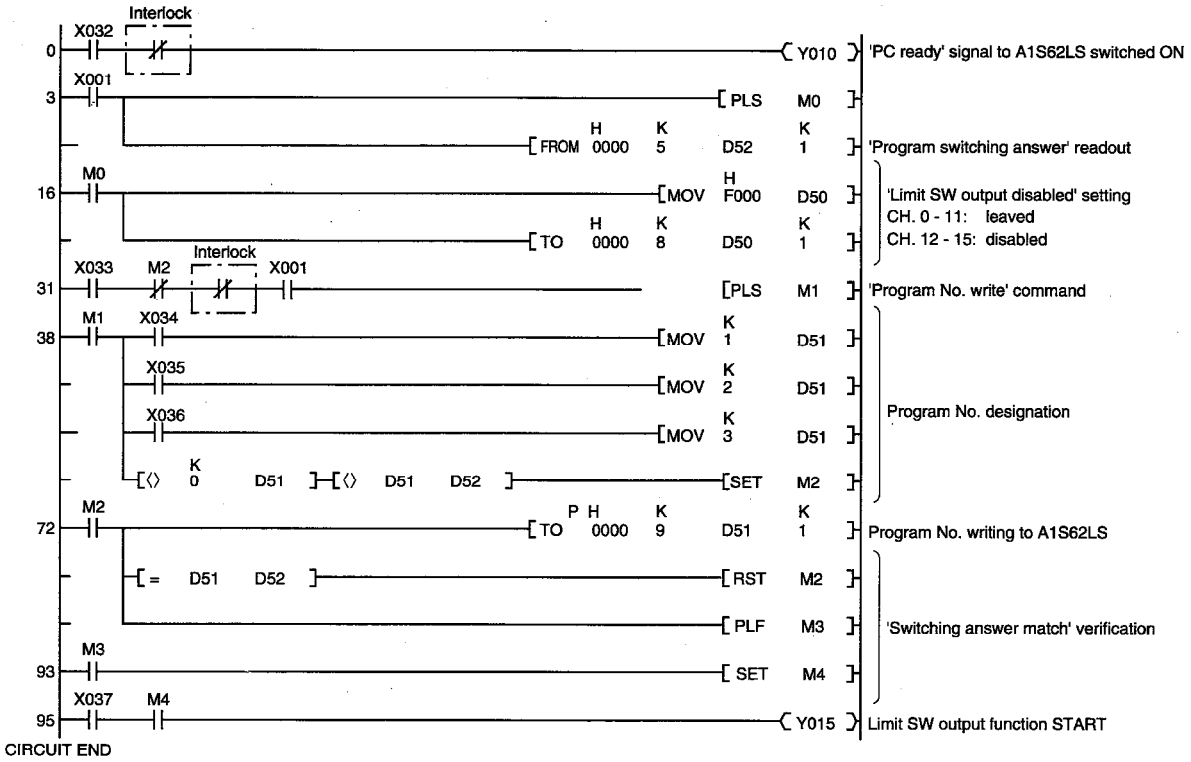

Explanation

(1) The limit switch output function is started when the Y10 and Y15 signals come ON.

(2) The 'limit SW output disabled' setting is designated at address 8 of the buffer memory as shown below.

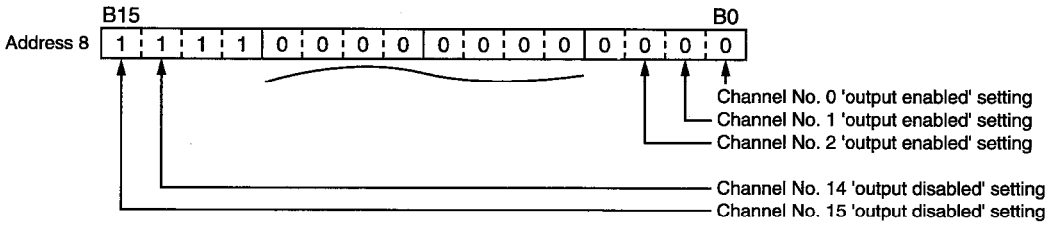

'1' or '0' is designated at the bits which correspond to each of the channels:

0: Channels where limit SW output function's ON/OFF control occurs.

1: Channels where limit SW output function does not occur.

(3) The desired program No. (1-3) is selected by turning the corresponding X34 - X36 signal ON. Signal X33 is then turned ON to write the designated program No. to A1S62LS.

Example 2):

To start the limit switch output function by designating the desired setting data which is stored at the PC CPU's file register, and writing that data to the program No. 0 area.

Conditions

(1) The following signal assignments are used to control the A1S62LS:

A1S62LS 'online' command ·····X32

Program No. 'write' command ·····X33

Program selection switch ·····X34 (For program A)

·····X35 (For program B)

·····X36 (For program C)

Limit SW output function START command ···X37

Limit SW output disabled ·····D51

Channel information storage register

'Program switching answer' storage register ···D52

(2) The program A - C setting data is stored in advance at the file register.

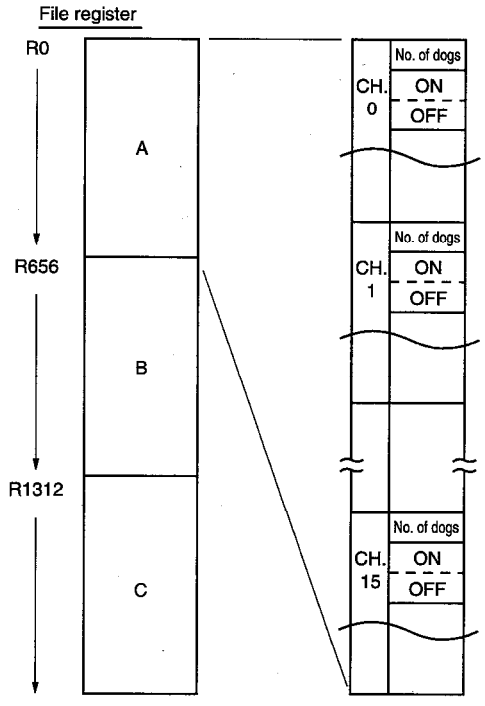

(3) The number of channels varies according to the program used:

Program A ·····Channels 0 - 11

Program B ·····Channels 0 - 7, 12 - 15

Program C ·····Channels 0 - 3, 8 - 15

Program Example

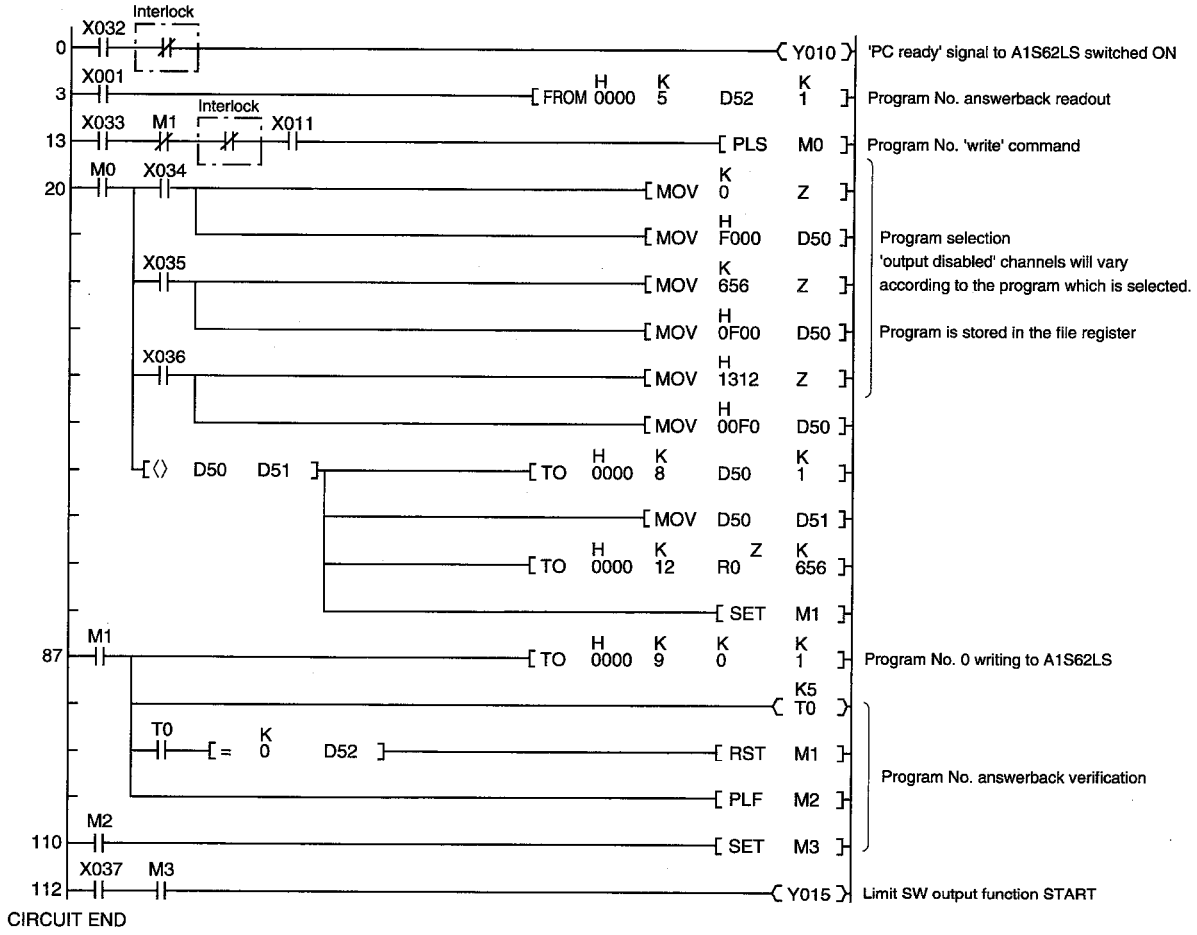

Explanation

(1) The limit switch output function begins when the Y10 and Y15 signals turn ON.

(2) The desired program (A - C) is selected by turning the corresponding X34 - X36 signal ON. Signal X33 is then turned ON to write the designated program to the A1S62LS.

The 'switching verification' consists of a program answerback of '0' which occurs 0.5 seconds after the change command.

6.6.3 Writing program to program Nos. 1 - 8

This section provides an example of the program to write the setting data stored in the PC CPU file register to the A1S62LS's program No. 1.

Conditions

(1) The following signal assignment is used to control the A1S62LS.

A1S62LS online command ····· XF0

Program write command ····· XF1

Sequence mode answerback storage register ··· D0

(2) The program data should be stored in the buffer memory in advance.

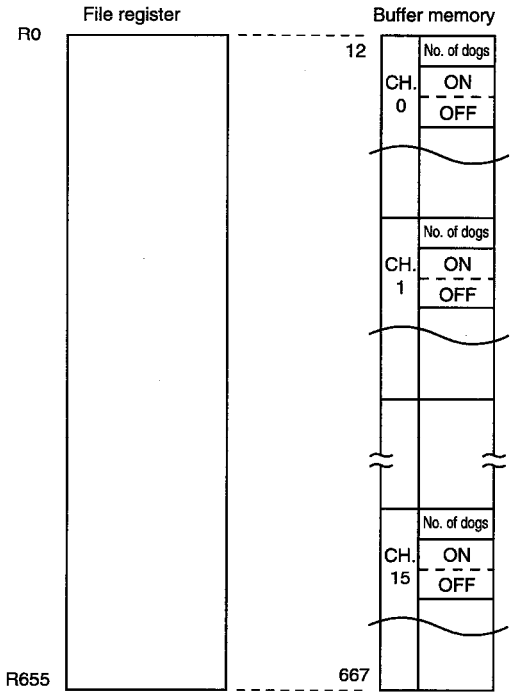

Program Example

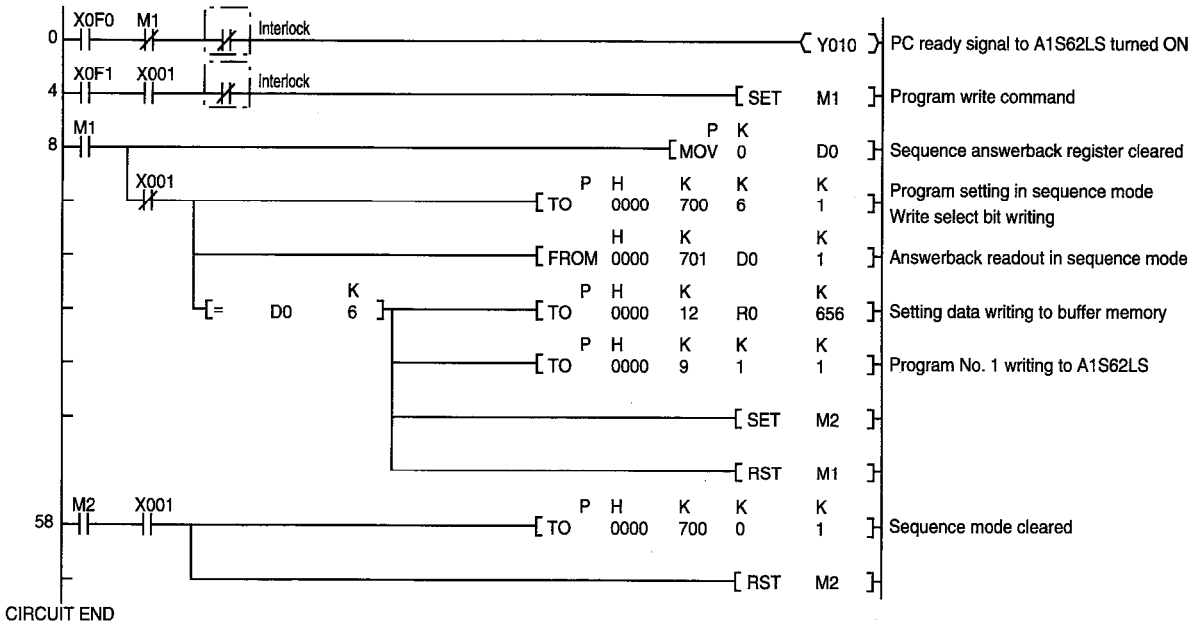

6.6.4 Reading program from program Nos.1 - 8

This section provides an example of the program to read the setting data from the A1S62LS's program No. 1 area to the PC CPU file register.

Conditions

(1) The following signal assignment is used to control the A1S62LS.

A1S62LS online command XF0

Program read command XF1

Sequence mode answerback storage register ... D0

(2) The program data should be stored in the A1S62LS program No. 1 area in advance.

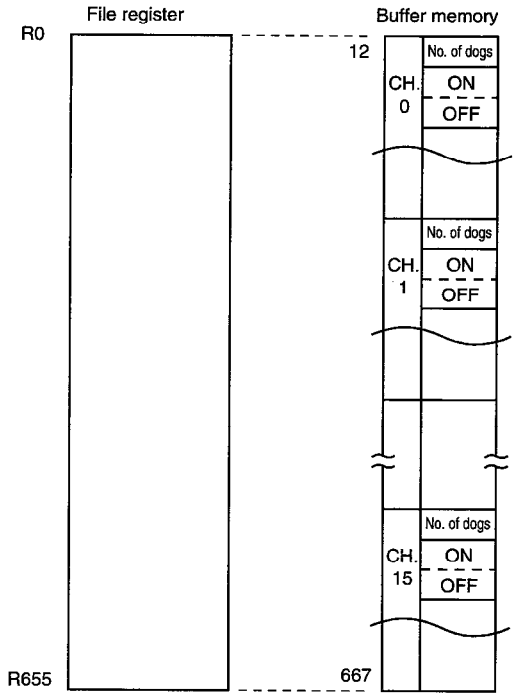

Program Example

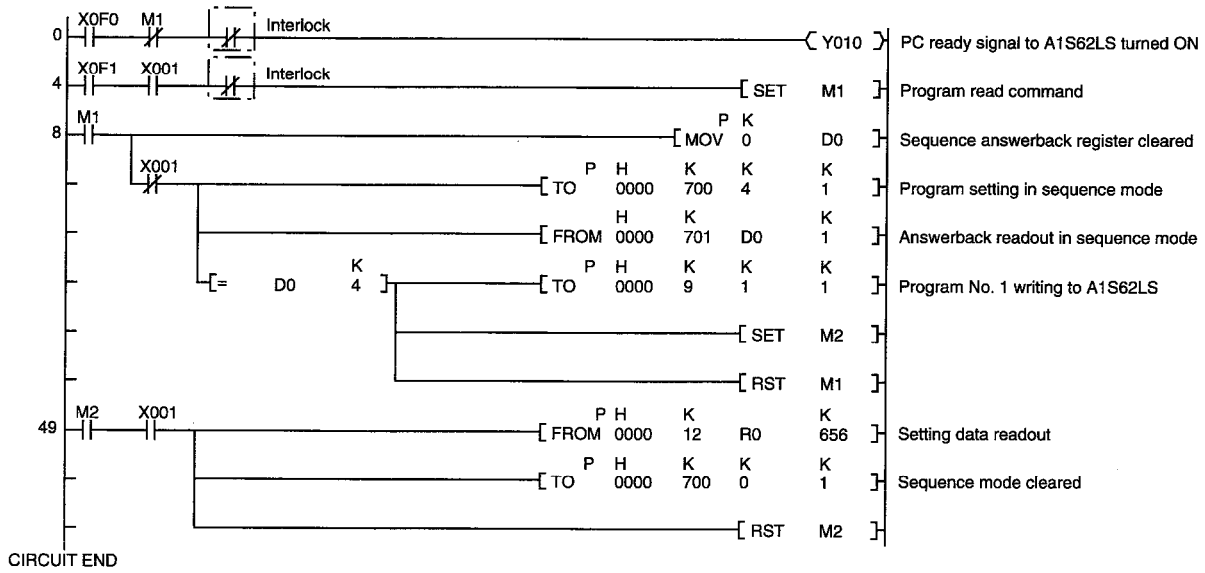

6.6.5 Program for output status readout

A program example for the ON/OFF status readout of each of the 16 channels (0-15) is given below.

Conditions

(1) The following signal assignments are used to control the A1S62LS:

Output status storage register ·····D30

Output status detection for each channel ·····M10 - M25

Output status readout command ·····X30

Program Example

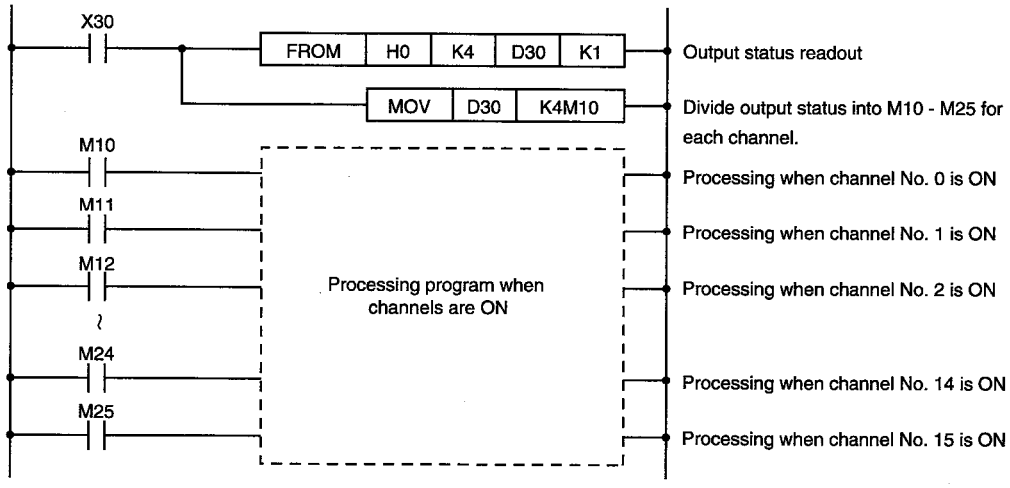

Explanation

(1) The output status is stored at address 4 of the buffer memory as follows:

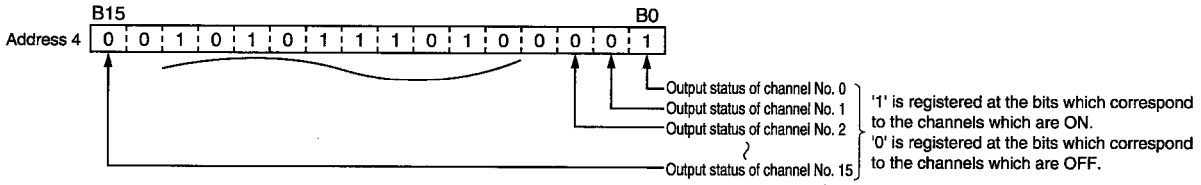

6.6.6 Remote I/O station programming

The master station (ACPU) programming which is required when the A1S62LS is installed at a remote station is explained below.

(1) Notes on programming:

There are two ACPU input/output control modes: the 'direct' mode, and the 'refresh' mode. However, for data communication with a remote I/O station, the 'refresh' mode is used after the END (FEND) instruction is executed.

Please note the following precautions when the A1S62LS is installed at a remote I/O station. For details regarding data link specifications, refer to the User's Manual for the data link module.

(a) There is a time lag (response delay) in the communication of control data between master and remote I/O stations which must be allowed for when specifying the system.

Therefore, care must be taken when designating the control timing.

(b) The following instructions are used for data communication with the remote I/O station A1S62LS:

Data writing from the master station to the remote I/O station A1S62LS: RTOP instruction.

Data reading from the remote I/O station A1S62LS to the master station: RFRP instruction.

Data communication between the master station CPU and the A1S62LS occurs at the 'link register (W)'. Therefore, when required, a processing program should be included just after the RFRP instruction where the link register data is to be transferred to another device, or just prior to the RTOP instruction where the transfer data is to be transferred to the link register.

(c) The RTOP and RFRP instructions cannot be executed simultaneously (within 1 scan) for a single remote I/O station A1S62LS. (If there are two A1S62LS's installed at the remote I/O station, the above instructions can be executed simultaneously provided that the RTOP instruction is for the No. 1 A1S62LS, and the RFRP instruction is for the No. 2 A1S62LS.)

For this reason, the signals shown on the following page must be integrated with the interlock conditions.

Although all the input/output signals are assigned from the master station, in the following example they are shown as signals for the X0 - 1F, Y0 - 1F devices.

(d) Control signals to A1S62LS:

Depending on the relationship between the master station's scan time and the link scan time, the Y□□ signal sent to the remote I/O station may not be output as PLS Y □□.

Due to the 'refresh' mode which is used after data communication between the master station and the remote I/O station has been ended by the END (FEND) instruction, the pulse output which executes the RST instruction (after SET instruction is executed) cannot be used.

Signal Direction: PC CPU → A1S62LS		Signal Direction: A1S62LS → PC CPU	
Device No.	Signal Name	Device No.	Signal Name
Y0 - YC	User operation prohibited	X10 - X1C	User operation prohibited
YD	Signal for turning X1D OFF.	X1D	Comes ON when RFRP/RTOP instructions cannot be executed due to an error at a special function module.
YE	When RFRP instruction is executed (from master station to CPU Link module transfer), master station CPU is turned ON. After verifying X1E ON status, a reset at the user program is required.	X1E	Remote station A1S62LS comes ON while RFRP instruction is being processed.
YF	When RTOP instruction is executed (from master station CPU to Link module transfer), master station CPU is turned ON. After verifying X1F ON status, a reset at the user program is required.	X1F	Remote station A1S62LS comes ON while RTOP instruction is being processed.

When RFRP/RTOP instructions cannot be executed due to an error at a special function module.

Comes ON when remote station A1S62LS error occurs

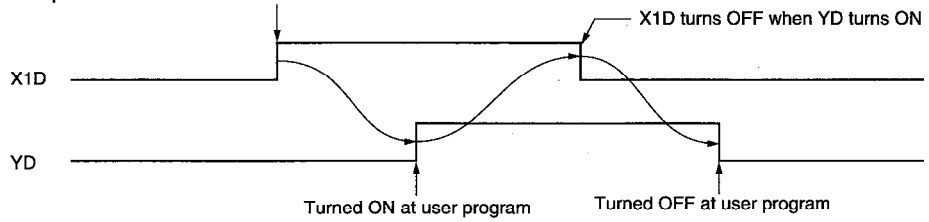

When RFRP instruction is executed

Turned ON when RFRP instruction is executed

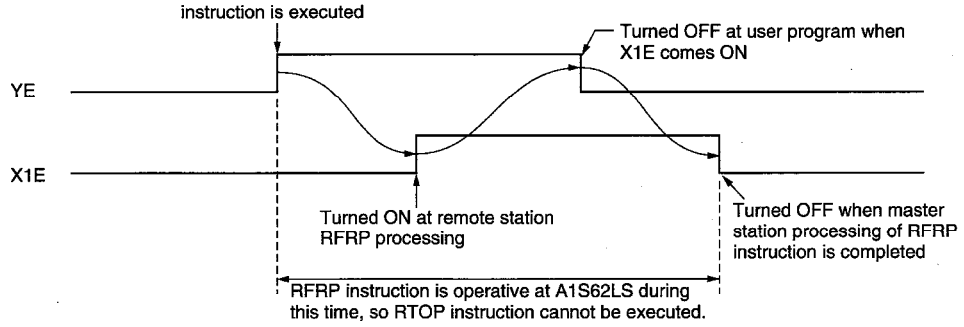

When RTOP instruction is executed

Turned ON when RTOP instruction is executed

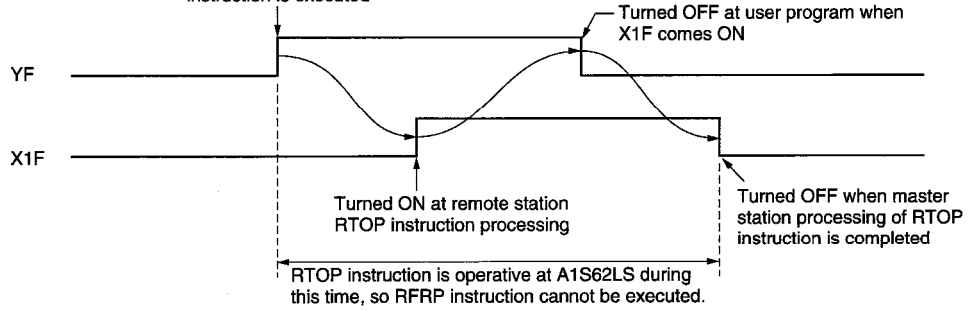

(2) Program Example

The following program example is used to start the limit switch output function and to change a program No., with the remote I/O station A1S62LS (X, Y130 - 14F device No.) being controlled by the signals assigned from the master station.

Conditions

(a) The following signal assignments used to control the A1S62LS:

A1S62LS 'online' command ·····X152

Program No. 'write' command ·····X153

Program No. selection switch ·····X154 (for prgm No. 1)

·····X155 (for prgm No. 2)

·····X156 (for prgm No. 3)

Limit SW output function START command

·····X157

Program No. storage register ·····W51

'Program switching answer' storage register

·····W52

(b) A1S62LS channels '0 - 11' are designated for use.

(c) The setting data for program Nos. 1 - 3 has been designated in advance at the A1S62LS.

(d) The operation procedure is as follows:

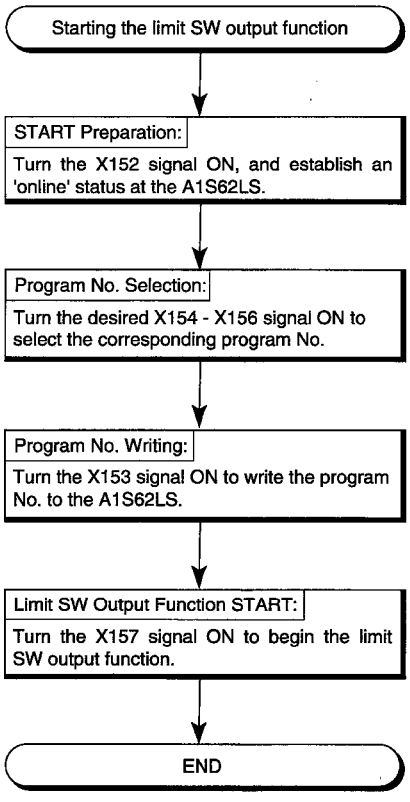

Program Example

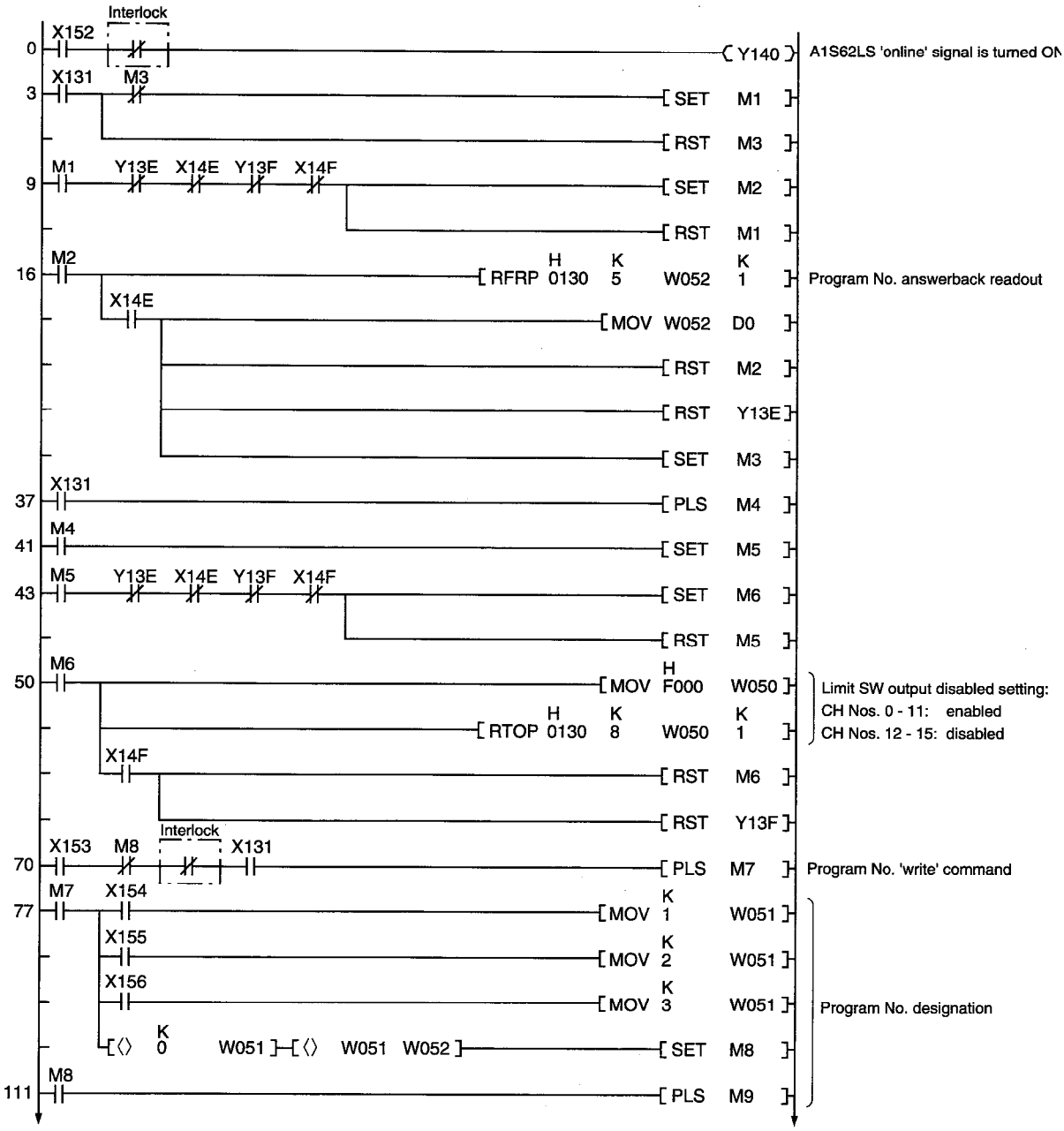

Continued on next page

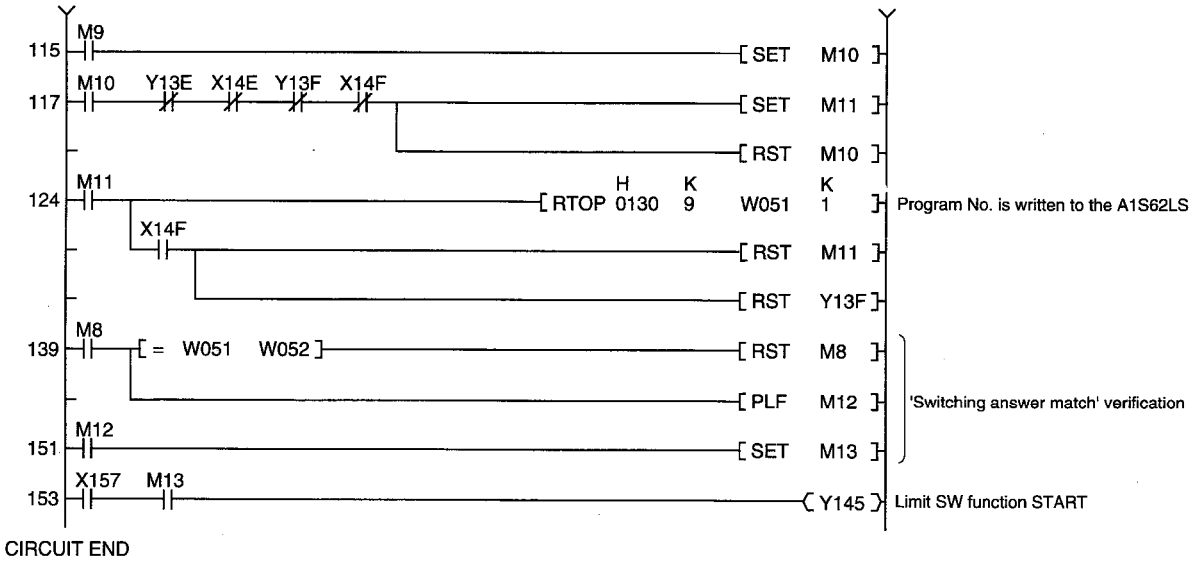

Explanation

(a) The limit switch output function begins when the Y140 and Y145 signals turn ON.

(b) The 'limit switch output function disabled' settings are registered at address 8 of the buffer memory as shown below.

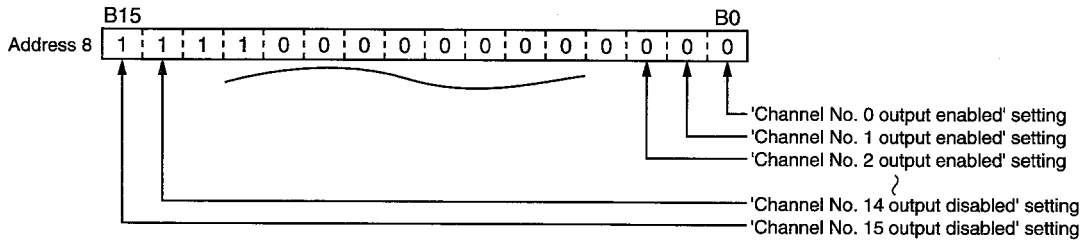

A '1' or '0' is setting is designated at the bits which correspond to each channel:

0: 'Limit SW function output enabled' channel.

1: 'Limit SW function output disabled' channel.

(c) The desired program (1 - 3) is selected by turning the corresponding X154 - X156 signal ON. The selected program No. can then be written to the A1S62LS by turning the X153 signal ON.

6.7 Operation

This section explains operation of the limit switch output function.

Set '0' to all bits of the buffer memory sequence mode selection (address 700).

When using the VS-T62 (external setting unit), set the manual mode to RUN.

This state is called 'RUN mode'.

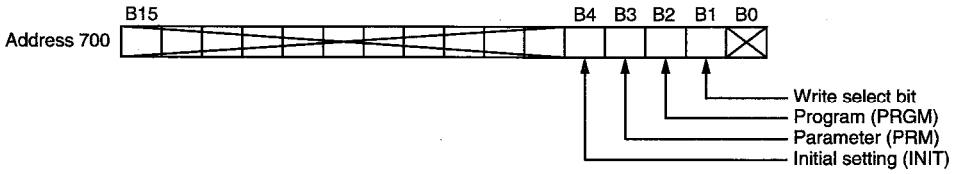

(1) The mode is cleared to RUN mode when the power supply is turned ON or the PC CPU is reset.

(2) RUN mode can prohibit the mode to be changed from the sequence program in manual mode.

Turn Y19 of the sequence program ON, and mode change will not be accepted.

6.7.1 Program switching

The limit switch output program switching procedure when in the RUN mode is explained below.

When the A1S62LS is online, the limit switch output function is executed according to the content of the program No. setting area at address 9 of the buffer memory.

Although '0' is registered at the program No. setting area when the power is turned ON or when a PC CPU reset occurs, the content of the buffer memory's program No. 0 setting area will be cleared.

Therefore, the limit switch output function will remain OFF even if an online status is established.

(1) The timing chart shown below is for an operation which occurs in the following sequence:

a) Power is turned ON, b) With an 'offline' status established, '3' is designated at the program No. setting area., c) 'Online' status is then established.

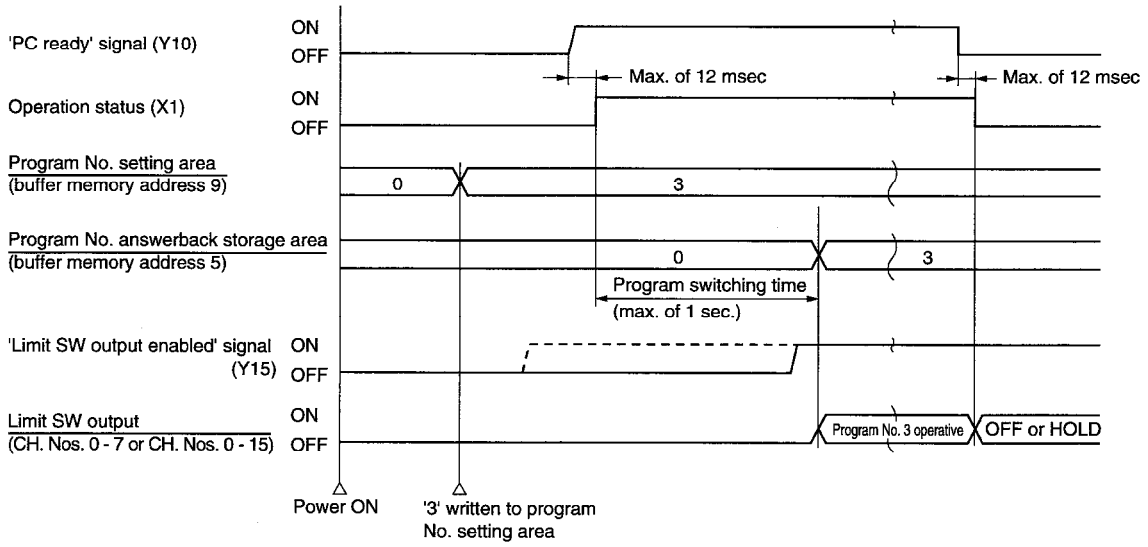

The 'program switching time' shown in the above timing chart is in the 0.03 to 1 sec. range, according to the total number of dogs. (As a rule, a time of 5 msec per dog is required.)

(2) The timing chart shown below is for an operation in which the setting value at the program No. setting area is changed (while online) from '3' to '4'.

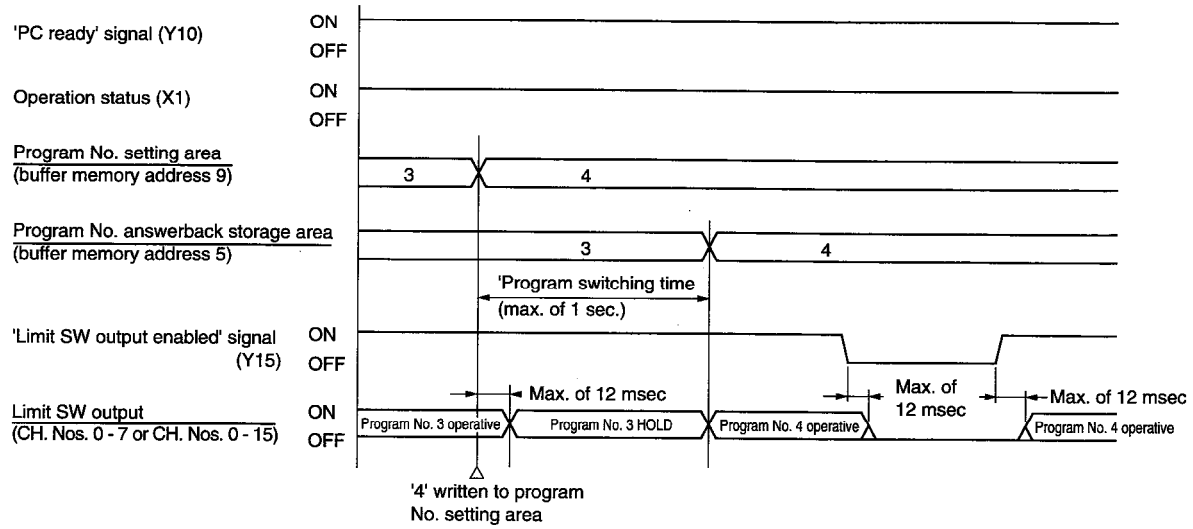

6.7.2 Operation of program No. 0

Some precautions regarding program No. 0 operation are explained below.

Program No. 0 settings for dog ON/OFF positions are normally written to the buffer memory by the sequence program.

The buffer memory content is then written to the internal memory (and limit SW output settings become operative) at the following times (refer to section 6.5.2 for details regarding program No. 0 settings):

(a) When '0' is written at the program No. setting area (buffer memory address 9) during an online status.

(b) When the setting value at address 9 of the buffer memory was '0' when the operation status was switched from 'offline' to 'online'.

If the dog ON/OFF setting value stored in the buffer memory are changed during program No. 0 operation, the limit switch outputs will not be changed at that time.

In order to change the limit switch outputs, '0' must be re-written at the program No. setting area (buffer memory address 9), or the operation status must be turned to 'offline', and then back to 'online'.

(1) The timing chart shown below is for an operation which occurs in the following sequence:

a) Power is turned ON., b) Buffer memory dog setting values are writing in the buffer memory during 'offline' status., c) Operation status is switched to 'online' and program No. 0 operation is executed.

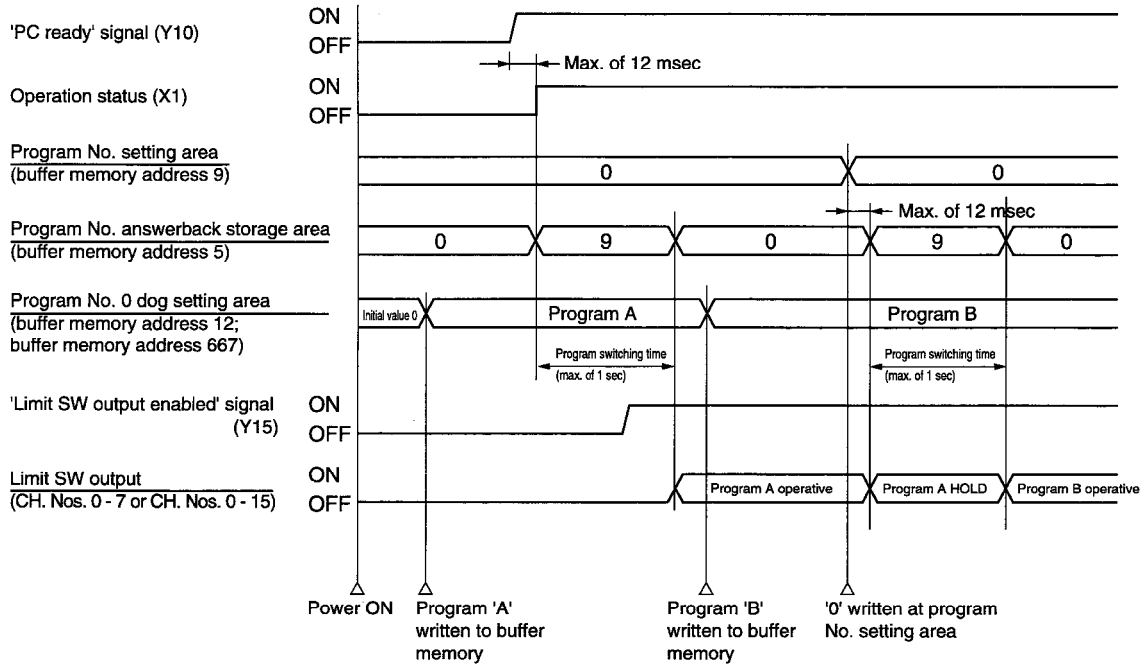

(2) If program No. 0 operation is executed when '0' is designated at the 'program No. answerback' storage area, the '0' will change to '9' during program switching.

7. POSITIONING FUNCTION

This section explains the A1S62LS positioning function.

7.1 Operation Description

The position function consists of an operation in which the ABSOCODER sensor detects the machine's current position value and compares that value with the pre-designated speed-change data, and target position data, etc., and then outputs the appropriate motor control signals in order to move the machine to the designated the target STOP position.

The positioning range is the range in which the ABSOCODER sensor can execute absolute position detection.

The machine travel range must be within the absolute position detection range.

Positioning will begin when the START input occurs, after the low-speed zone, stop zone, In-position zone, and medium-speed zone (if required) parameter settings have been made, and after the target stop position has been written to the buffer memory by the sequence program.

Refer to section 7.4.6 for details regarding the above parameter settings.

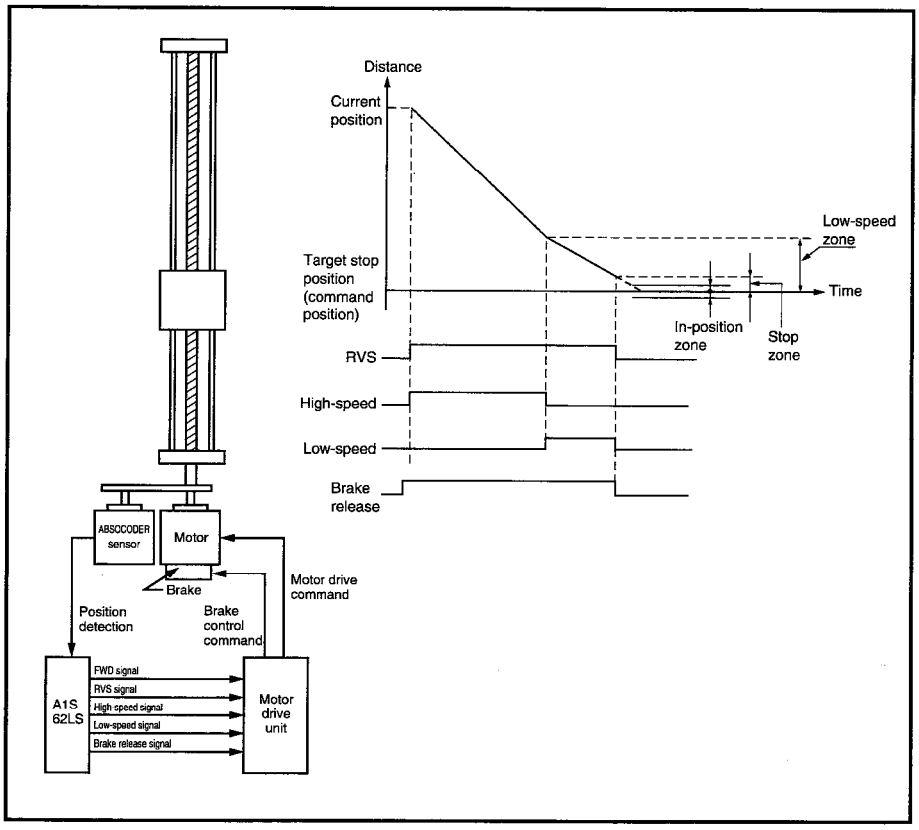

Fig. 7.1 Example of Speed Switching Format Without Positioning Overshoot

(1) The positioning operation is controlled by the following 8 output signals:

These four outputs (channel Nos. 8 - 11) are called 'operation output'.

CH. 8	FWD (FWD/low-speed for 'speed stepping format')
CH. 9	RVS (RVS/low-speed for 'speed stepping format')
CH. 10	High-speed
CH. 11	Low-speed (Medium-speed for 'speed stepping format')
CH. 12	Brake release
CH. 13	In-position
CH. 14	Positioning in progress
CH. 15	Operation error

Refer to section 7.1.4 for details regarding the timing of each signal.

(2) A single A1S62LS can execute positioning control for 1 axis only.

(3) Channel Nos. 0 - 7 are not used by the positioning operation, and can therefore be used for the limit switch output function.

Channels Nos. 8 - 15 are used for positioning function.

(4) The positioning function is started when the A1S62LS's Y11 signal is turned ON.

(5) A target stop position setting can be written to the buffer memory while the A1S62LS positioning operation is in progress.

Positioning begins when the Y11 signal is turned ON; the target stop position setting read at that time, a subsequent changes made in the target stop position setting will not affect the positioning operation already in progress.

Target stop position setting changes should be made when the 'positioning in progress' signal is OFF.

(6) The setting range for the target stop position is according to the 'scale length' and 'minimum current position value' as follows:

Target stop position setting range =
[minimum current position value] to
[minimum current position value + scale length -1]

Even if the target stop position is within the permissible setting range, error 41 will occur under the following conditions:

When the position after a positioning overshoot is outside the permissible setting range.

When a positioning START occurs within the stop zone, and a position equivalent to the 'length of the stop zone multiplied by 2' is outside the permissible setting range.

(7) The medium-speed zone, low-speed zone, stop zone, and In-position zone are shown below relative to the target stop position.

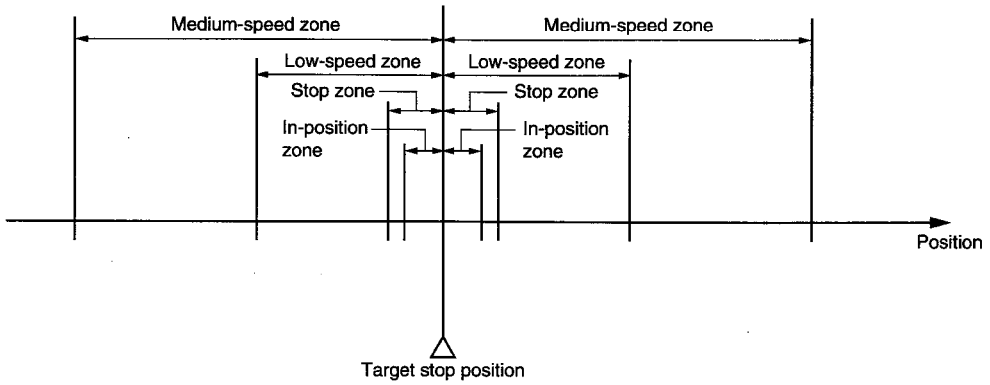

Although the brake is applied at the stop zone position, subsequent motion due to inertia should be considered when designating the stop zone setting in order to ensure that motion is stopped at the target stop position.

7.1.1 Unidirectional positioning

A unidirectional format is used for A1S62LS positioning.

To execute positioning from the opposite direction, the target stop position must be overshot first, with positioning then occurring from the prescribed direction after making a U-turn. The unidirectional positioning format reduces positioning errors caused by gear backlash, etc.

(1) The A1S62LS automatically determines if a position overshoot is necessary based on whether the current position value is larger or smaller than the target stop position value, and on the FWD (forward) or RVS (reverse) positioning direction (designated by parameter setting).

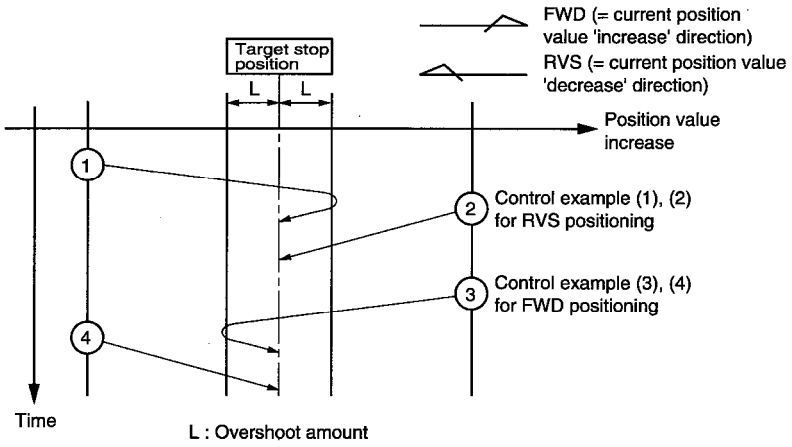

(2) The overshoot amount is determined by a parameter setting (refer to section 7.4 for details). If the overshoot amount is designated as '0', bidirectional positioning (no overshoot) will occur.

7.1.2 Positioning speed switching format

In the 'speed switching' format, the 'high-speed' and 'low-speed' speed switching signals operate independently, with the high-speed signal being ON during high-speed operation, and the low-speed signal being ON during low-speed operation. Figure 7.2 below shows the control timing for the speed switching format.

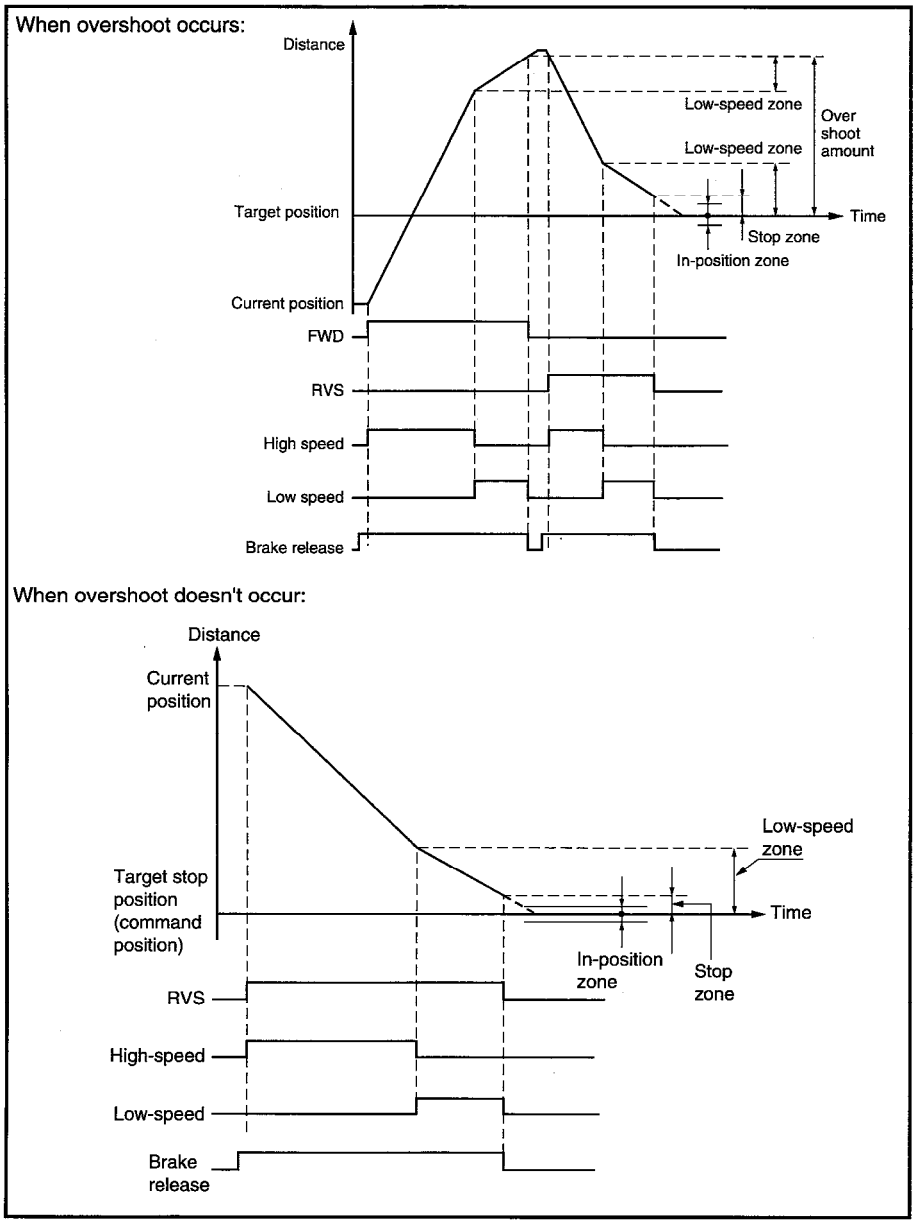

Fig. 7.2 Control Timing for Speed Switching Format

(1) The parameter settings which designate the low-speed zone, stop zone, and In-position zone are made in advance at the A1S62LS.

Positioning begins when the sequence program writes the target stop position to the buffer memory and then executes the START input.

Refer to section 7.4 for details regarding the low-speed zone, stop zone, and In-position zone parameter settings.

7.1.3 Positioning by speed stepping format

In the 'speed stepping' format, the high-speed zone, medium-speed zone, and low-speed zone signals do not operate independently.

Instead, they are combined to produce a stepped speed switching output. Fig. 7.3 below shows the signal timing for the speed stepping format.

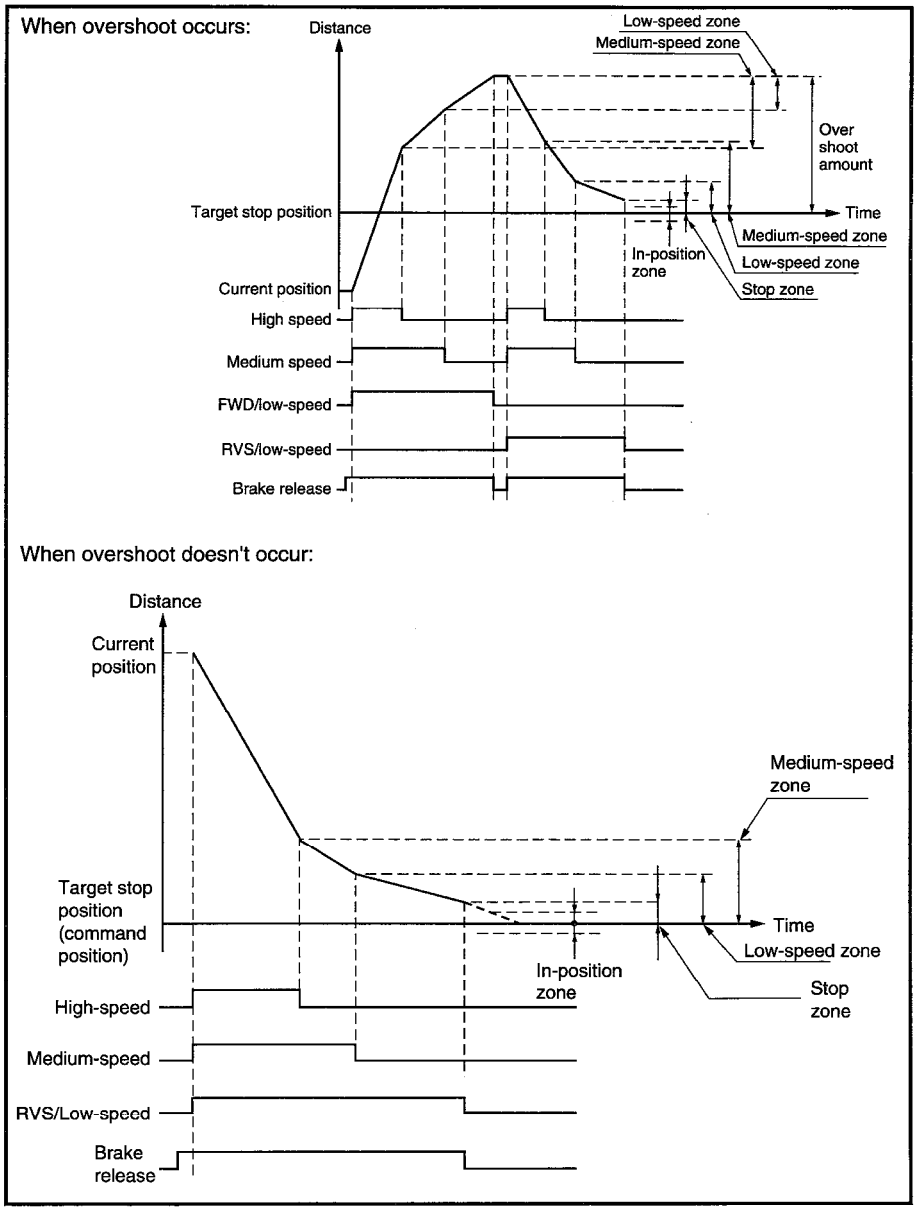

Fig. 7.3 Control Signal Timing for Speed Stepping Format

(1) The parameter settings which designate the low-speed zone, stop zone, and In-position zone are made in advance at the A1S62LS.

Positioning begins when the sequence program writes the target stop position to the buffer memory and then executes the START input.

Refer to section 7.4 for details regarding the low-speed zone, stop zone, and In-position zone parameter settings.

7.1.4 Control timing

The following charts show the ON/OFF timing for each of the positioning control signals.

When 'overshoot positioning' is started by turning the START signal ON:

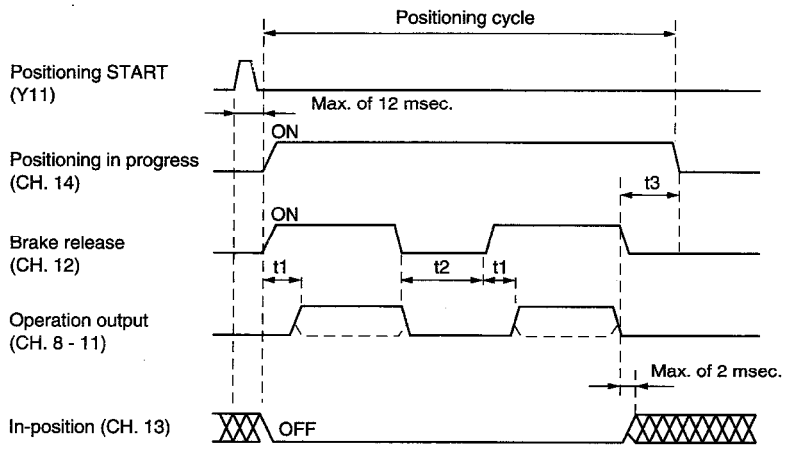

When positioning is stopped by turning the STOP signal ON:

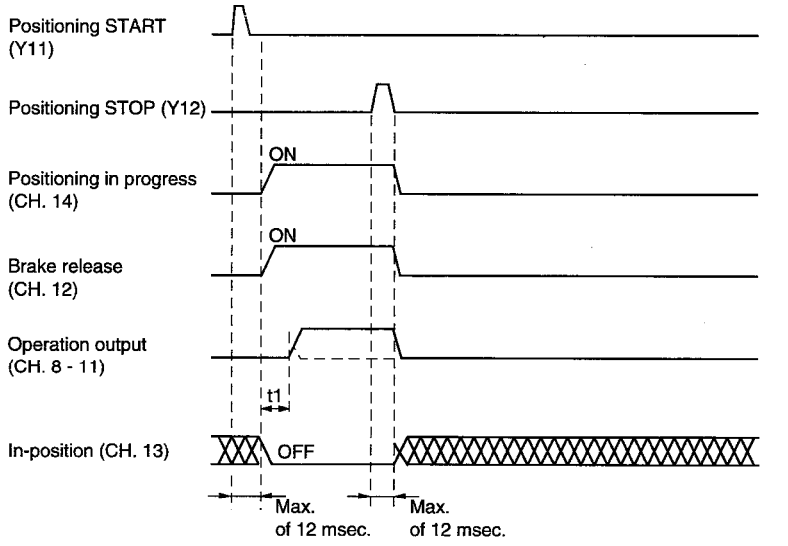

(1) The 'operation output' item shown above consists of the following outputs:

Speed switching format	FWD, RVS, high-speed, low-speed
Speed stepping format	FWD low-speed, RVS low-speed, high-speed, medium-speed

(2) 't1' indicates the delay period from the point when the brake is released, until the point when the operation output comes ON. (10 msec)

(3) 't2' indicates the 'stop detection' time required before a U-turn can occur after overshooting.

After the A1S62LS has turned the operation output OFF and the brake ON (simultaneous operation), a 'stop' status is recognized when the amount of current position change per each 100 msec is plus/minus 2 bits (as a sensor binary value). As soon as a stop status is detected, reverse direction travel will be executed.

(4) 't3' indicates the delay period (after positioning is stopped) from the point when the 'brake release' signal goes OFF (brake ON) until the point when the 'positioning in progress' signal goes OFF. The 't3' period is designated by the parameter (positioning end detection timer) setting (refer to section 7.4 for details).

(5) The 'in-position' signal is OFF during the positioning cycle ('positioning' signal is ON), except during the 't3' period.

If during the 't3' period, or when positioning is ended, the current position value is within the In-position zone of the designated target stop position, the 'in-position' signal will turn ON.

Although the In-position zone is passed through during the overshoot operation, the 'in-position' signal will not turn ON at that time.

The In-position zone is designated by the parameter setting (refer to section 7.4 for details).

(6) The 'in-position' signal will always go OFF when the power is turned ON.

During an 'online' status, or during TEST mode operation, the 'in-position' signal will turn ON after positioning is completed if the current position at that time is within the In-position zone of the designated target stop position.

The 'in-position' signal is always the final output which occurs (if in position) after all positioning is completed. (If the operation status is switched from 'online' to 'offline' while the 'in-position' signal is ON during the RUN mode, the 'in-position' signal will go OFF. However, if the operation mode is switched back to 'online', the 'in-position' signal will come back ON if the current position at that time is still within the In-position zone of the designated target stop position.)

(7) Even if the current position value following the completion of the positioning cycle is outside either the In-position zone or stop zone, the positioning operation will not be resumed. An 'in-position' status is indicated by an 'in-position' signal (XD) from the sequence program.

(8) If the current position value is already within the In-position zone of the target stop position when positioning is started, positioning will not occur, although the 'positioning' signal will come ON for a 't3' period (Refer to section 7.1.5 (3) for details).

(9) Although the FWD and RVS signals are never output simultaneously during the positioning operation, a 'hardware interlock' condition should be established at the motor, etc., drive circuits as an additional precaution.

7.1.5 Starting operation from stop zone

The procedure for stating the positioning function from inside the stop zone is explained below.

When the stop zone is entered, the motor control signals for the positioning operation are turned OFF, and the brake is applied.

Though, in the course of normal operations, it is impossible to begin a positioning operation from inside a stop zone, the A1S62LS can perform this operation when necessary.

(a) Move the current position twice the distance of the stop zone, in the opposite direction from the parameter designated positioning direction.

(b) Stop movement at that position.

(c) Then re-execute positioning toward the target stop position.

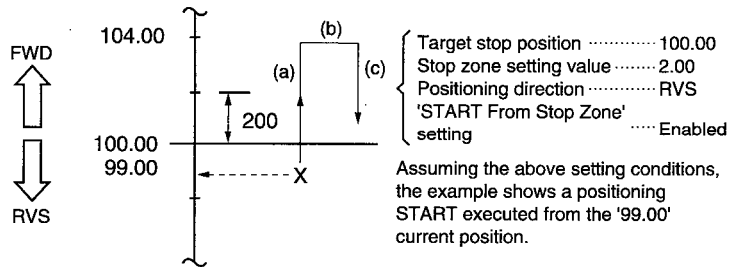

(1) The control timing for a 'START from stop zone' operation is identical to that shown in section 7.1.3.

(2) The parameter setting determines whether or not the A1S62LS can execute a 'START from stop zone' operation. (Refer to section 7.4 for details.)

(3) If the 'START from stop zone disabled' setting is designated, positioning cannot be started from within a stop zone.

However, the 'positioning in progress' signal will come ON at the time shown below.

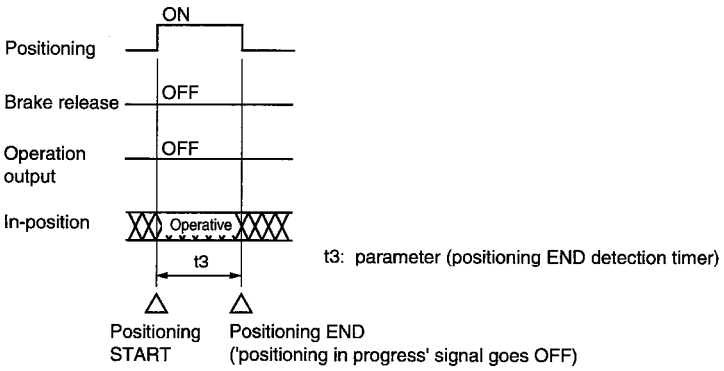

(4) Even if the 'START from stop zone' opration occurs, positioning will not be executed within the In-position zone. However, the 'positioning in progress' signal will come at the same time as shown in item (3) above.

7.1.6 Simple learning function

If a positional discrepancy occurs between the target position and the current position upon completion of positioning, the discrepancy will be automatically corrected when the next positioning is carried out.

At this time, either the FWD stop zone or RVS stop zone is corrected depending on the positioning direction.

The stop zone is not corrected when 'start from stop zone' function is ON.

This improves positioning repeatability and minimizes overrun. An error will occur when the stop zone is not within the specified range upon completion of positioning.

Improved positioning due to this simple learning function is explained below.

(1) Setting the 'stop zone' parameter becomes easier.

The 'stop zone' parameter was conventionally set based on the predicted value. When using the simple learning function, the stop zone is automatically corrected by simply setting any value and repeating operation.

(2) 'Stop zone' does not need to be manually corrected as the brake becomes worn.

'Stop zone' is automatically corrected even for change in amount of brake slide due to wear.

(3) 'Stop zone' is not affected by load variation.

Load may vary due to travel in the reverse direction, such as the machine's up/down motion and trolley's advance and retract motion. For the A1S62LS, two 'stop zones' are provided; one for the FWD (forward) direction and one for the RVS (reverse) direction. Therefore, the simple learning function effectively works even for load variation.

REMARKS

When power supply is interrupted, the learned stop zone is stored in the internal memory and restored in the buffer memory when power is supplied next.

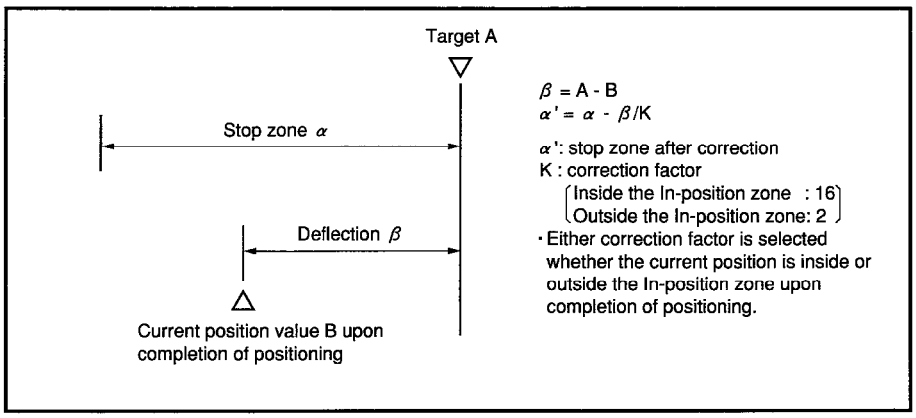

7.1.7 JOG operation

The JOG operation can be executed only in the RUN mode with an 'online' status established. The following requirements must be satisfied before the JOG operation can occur:

(a) Parameter (Function) must be set to 'Positioning Function & Limit SW Output Function".

(b) The 'operation error' signal (CH. 15) must be OFF.

(c) Positioning must not be progress.

The JOG operation occurs when the 'FWD JOG' signal (Y13) or 'RVS JOG' signal (Y14) is turned ON by the sequence program.

(1) The timing chart for the 'FWD JOG' operation is shown below.

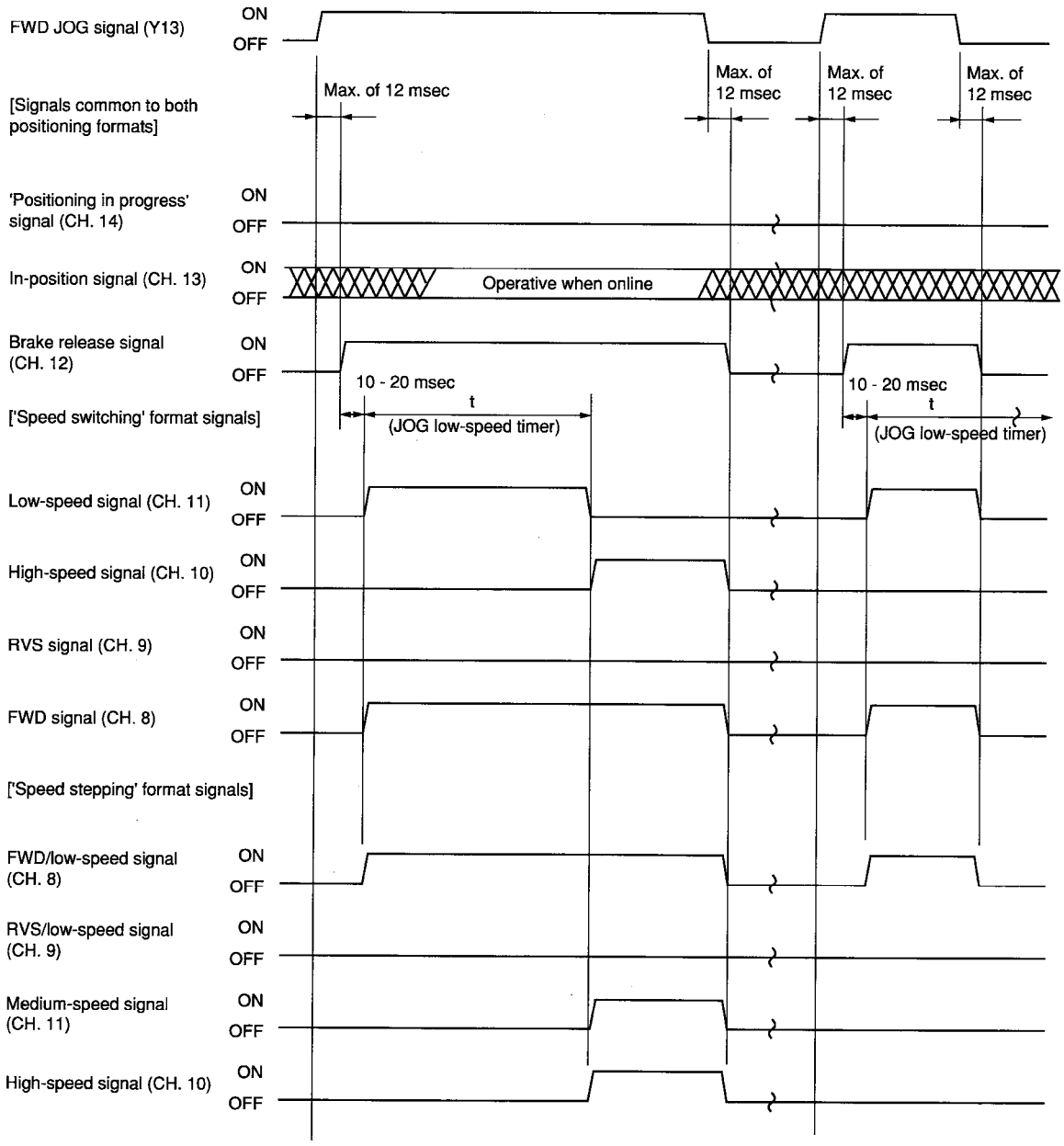

(2) The timing chart for the 'RVS JOG' operation is shown below.

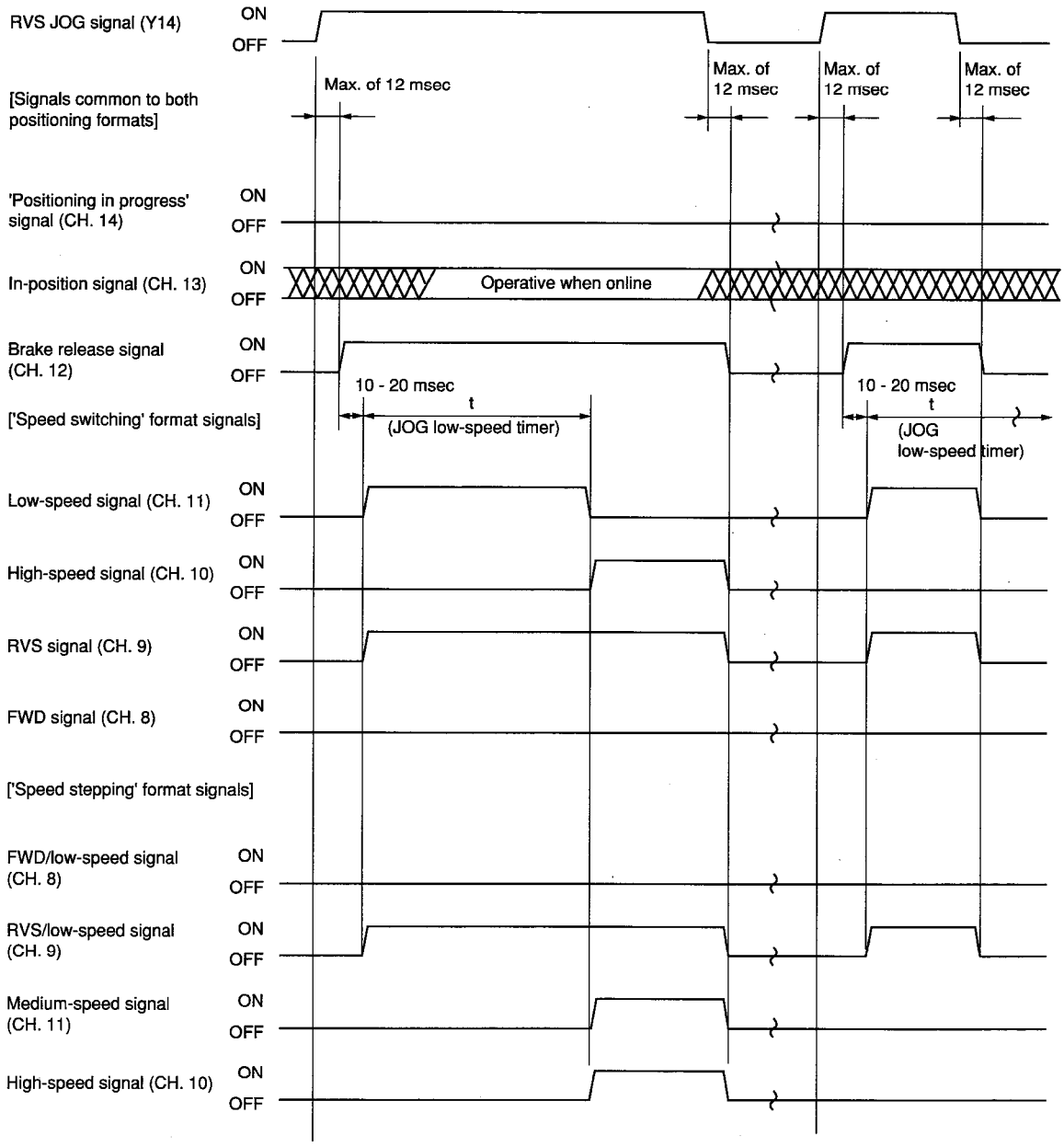

(3) If the JOG signal is ON when the 'JOG low-speed timer' period ('t' at item (1) and (2) timing charts above) has elapsed, an automatic low-speed to high-speed switch will occur.

The 'JOG low-speed timer' value period is designated by parameter. Even if a 't = 0.00' setting is designated, a low-speed output of up to 10 msecs may occur.

(4) The positioning START signal (Y11) will be inoperative during a JOG operation.

(5) A 'RVS JOG' signal input (Y14) will be inoperative during 'FWD JOG' (Y13) operation, and vice versa.

(6) If both the 'FWD JOG' (Y13) and 'RVS JOG' (Y14) signals are turned ON simultaneously, the 'FWD JOG' signal will have priority.

(7) Even if a simultaneous direction switch is designated for the JOG operation, the A1S62LS will automatically add a STOP period of 50 msecs.

7.1.8 Operation when detection range is exceeded

The A1S62LS executes absolute position detection within the detection range. However, if this detection range is exceeded, the current position value will immediately change by the amount of the entire scale length.

The following diagram shows the relationship between MRE sensor rotation and the current position value.

Precautions regarding a positioning operation which occurs near the limits of the detection range are explained below.

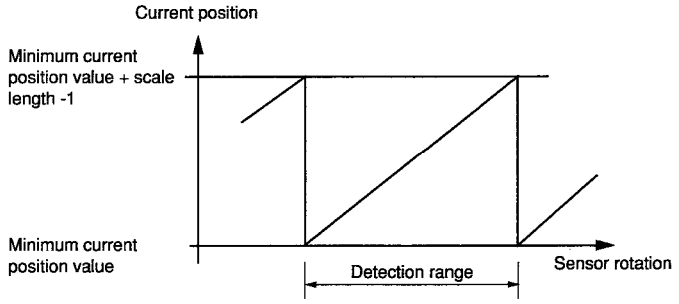

(1) The following example shows a case in which the detection range was exceeded during a positioning operation near the minimum current position value point.

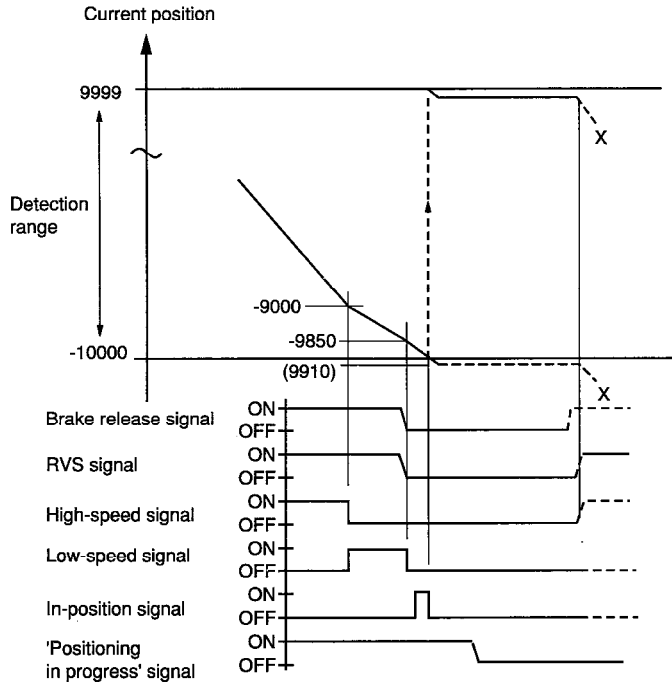

Conditions

Minimum current position value:	-10000
Scale length:	20000
Positioning format:	'Speed switching' format
Overshoot amount:	0
Low-speed zone:	1000
Stop zone:	150
In-position zone:	100
Target stop position:	-10000

In the above example, the target stop position of -9850 is overshot by 240 during RVS positioning, with the resulting current position of 9910 exceeding the detection range limit of -10000.

Because the -10000 limit has been exceeded, the current position will be detected as 9910 even if it is still within the In-position range of plus/minus 100, and the 'in-position' signal will not turn ON.

When positioning toward the target stop position is re-started from this status, reverse positioning will occur.

When the detection range is exceeded, the JOG operation, etc., should be used to move the current position back within the detection range prior to resuming the positioning operation.

(2) The following example shows a case in which the overshoot point is designated near the minimum current position value point, resulting in an 'overshoot stop' position which is outside the detection range.

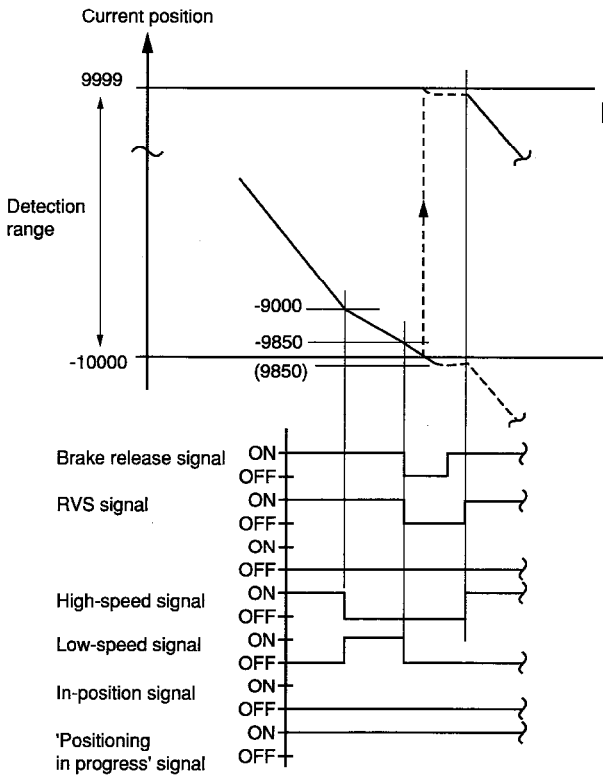

Conditions

Minimum current position value:	-10000
Scale length:	20000
Positioning format:	'Speed switching' format
Positioning direction:	FWD
Overshoot amount:	500
Low-speed zone:	1000
Stop zone:	100
In-position zone:	100
Target stop position:	-9300

The target position of -9300 becomes -9800 when overshoot occurs, due to an overshoot amount of 500.

In the above example, the overshoot point of -9800 is overshot in the reverse direction by the amount of 280 before a stop occurs.

As a result, the detection range limit of -10000 is exceeded, and the current position at the 'stop detection' point will be 9920. At that time, overshoot positioning is automatically re-started toward the -9300 target position.

Use caution regarding the above type of setting, as it could create a considerable risk depending on the machine being used.

(3) The A1S62LS 'excessive current position change' error detection function can be used to detect detection range violations.

To do this the 'excessive current position change' setting should be designated according to the machine being controlled, allowing a slight margin in the travel amount per each 20 msecs.

The 'upper limit/lower limit' detection function can also be used to detect detection range violations.

In this case, an error will be detected when the prescribed range is exceeded, and operation will be stopped.

Regardless of which function is used, a sequence program interlock condition must be established using the 'excessive current position change (X6)', 'upper-limit over detection (X2)', and 'lower-limit over detection (X3) signals.

IMPORTANT

(1) The positioning operation should not be used near the upper and lower limits of the detection range.

(2) When the use of the positioning operation near the upper/lower limit is unavoidable, be sure that a sequence program interlock condition is established, using the appropriate 'error detection' signals.

(3) As a backup safety measure, mechanical limit switches should be installed.

7.1.9 Current position presetting during positioning operation

The 'current position preset' function is operative even when positioning is in progress. The resulting operation is explained below.

(1) When the positioning direction is not changed as a result of the preset function:

The positioning operation is not interrupted.

However, because positioning control will now be based the current position value which exists after the current position preset function is executed, the speed may be switched from high-speed to medium-speed or low-speed after the current position preset function occurs, depending on the new position's distance from the target position.

(2) When the positioning direction is reversed as a result of the current position preset function:

Positioning will be stopped (emergency stop), and after a 'stop detection' has occurred, positioning toward the target position will be re-started based on the current position value which exists after the current position preset function is executed.

After being re-started, positioning occurs in the normal manner.

(3) When the current position value enters the stop zone as a result of the current position preset function:

Positioning will be stopped (emergency stop), and after a 'stop detection' has occurred, a 'START from stop zone' operation will automatically be executed, with positioning being based on the current position value which exists after the current position preset function is executed.

However if the 'START from stop zone disabled' parameter setting has been designated, positioning will not be re-started once the stop zone has been entered.

(4) The A1S62LS automatically recognizes a 'stop status; (stop detection) when the change in the current position value per each 100 msecs is plus/minus 2 bits (expresses as a sensor binary value).

(5) If the current position preset function is not to occur during the positioning operation, turn the 'current position preset 1 disabled' (Y17), and the 'current position preset 2 disabled' (Y18) signals ON in the sequence program.

7.1.10 Operation error

If any of the following 3 errors are detected during a JOG or positioning operation, operation will automatically be stopped (operation output OFF).

Following this, the 'operation error' signal (CH. 15) output will be turned ON.

(a) Sensor error (error code 22)

(b) Motion detection error (error code 42)

(c) Motion direction error (error code 43)

A1S62LS operation will continue when any error other than the above is identified.

If desired, the A1S62LS can be stopped by the sequence program.

When in the TEST mode, the A1S62LS cannot be stopped by the sequence program. Therefore, as a safety measure, operation is automatically stopped when any error (including the 3 shown above) occurs.

Both the Jog and positioning functions are inoperative while the 'operation error' signal is ON. The 'operation error' signal can be turned OFF by any of the following actions:

By turning the 'error reset' signal (Y16) ON at the sequence program.

By pressing the [CLR] key at the VS-T62.

By switching the operation mode.

(1) The 'motion detection error' is activated during the positioning operation when the change in the current position value per each 0.5 secs is plus/minus 2 bits or less (sensor binary value).

A 'non-detection period' can be added if necessary to compensate for the response delay from the motor drive circuits.

The 'non-detection period' is designated in parameter (motion non-detection timer).

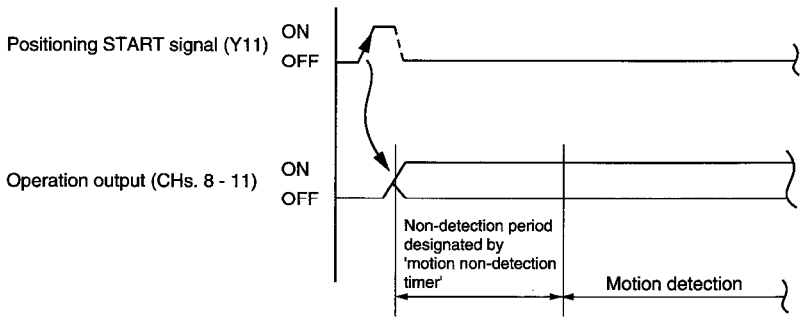

(2) The 'motion direction error' is activated during the positioning operation when the direction of current position change is opposite from that designated. This error is activated when the amount of current position change in the opposite direction per each 0.5 secs is plus/minus 3 bits or more (sensor binary value).

A 'non-detection period' can also added in the same manner as for the 'motion detection error' above.

The 'non-detection period' is designated in parameter ('Motion misdirection non-detection timer')

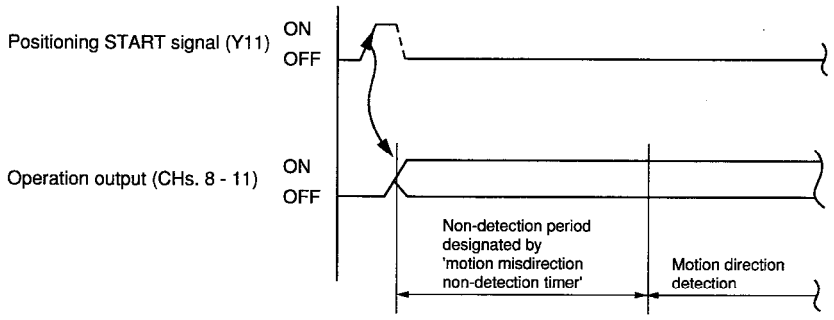

7.2 Positioning Function Setting and Operation Sequence

The procedure for executing the A1S62LS's positioning function is as below.

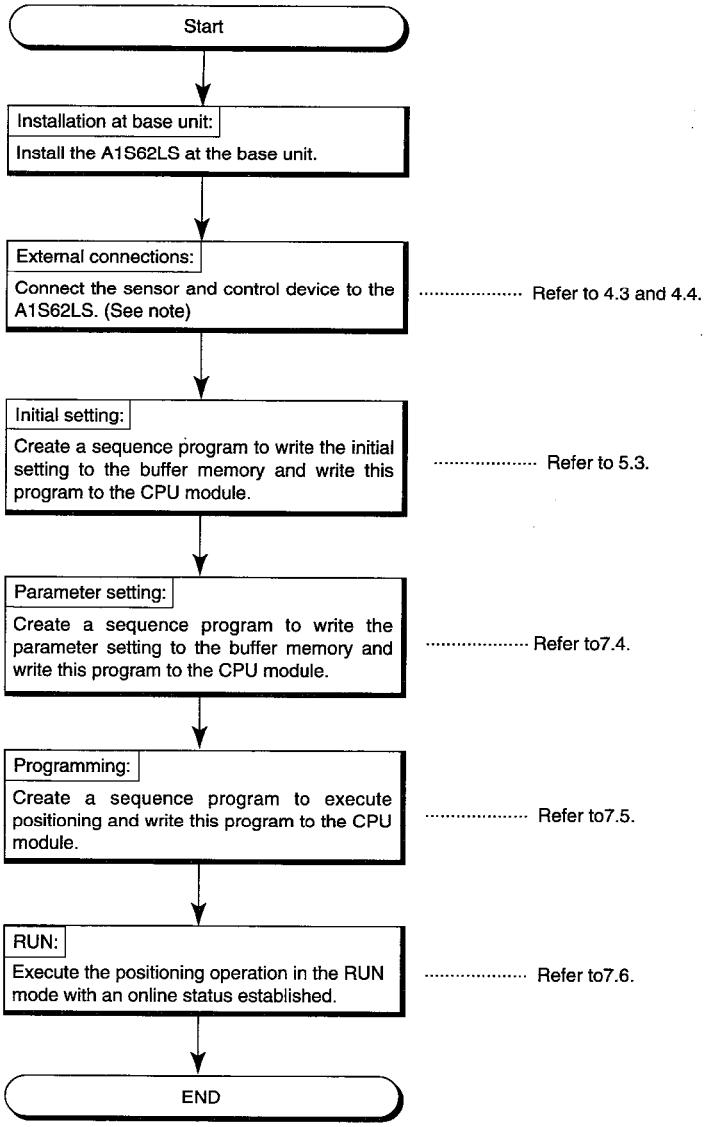

Remarks

Settings other than current position setting can be done even when the ABSOCODER sensor is not connected.

7.3 Initial Settings

Refer to 5.3 for the A1S62LS's initial settings.

The initial settings are commonly used for the current position detection function, limit switch output function, and positioning function.

7.4 Parameter Settings

This section explains the parameter settings for the A1S62LS's positioning function.

Parameters are factory-set (default).

Set the parameters requiring any changes only.

When writing the parameters, set '1' to the corresponding bit of the buffer memory address 700 (sequence mode selection). Set '0' to other bits.

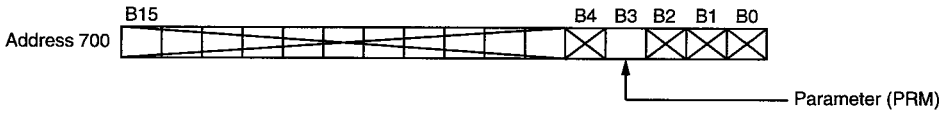

The data written to the buffer memory for data communication with the PC CPU is loaded to the A1S62LS when the PC ready signal (Y10) is turned ON in sequence mode.

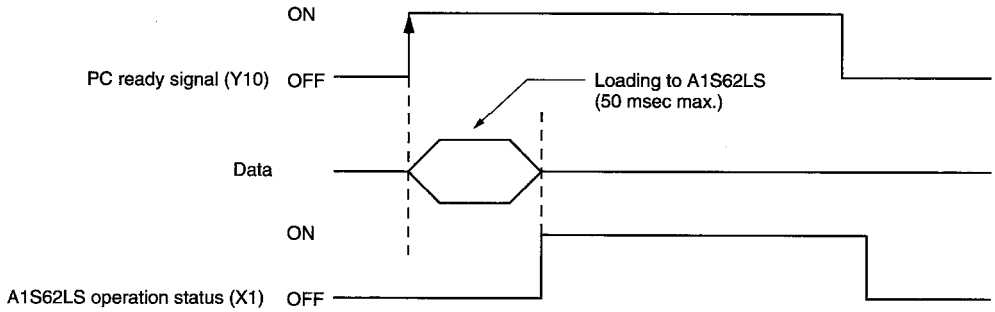

REMARKS

Some parameters of the A1S62LS are for the limit switch output function and others are for the positioning function.

This section explains the limit switch output function parameters.

Refer to 6.4 for details of positioning function parameters.

When using both the limit switch output function and the positioning function, set both parameters.

IMPORTANT

Writing to initial setting/parameter setting areas between addresses 702 and 750 shall not exceed 10,000 times.

7.4.1 Parameter list

No.	Address	Item	Contents	Setting data	Default
50	711	Function	Designates 'Current position detection function only', 'limit SW output function only' or limit SW output function & positioning function.	0: limit SW output function & positioning function 1: Limit SW output function only 2: Current position detection function only	2
51	712	Positioning format	Designates whether the 'speed switching' or 'speed stepping' format is to be used.	0: Speed switching format: w/o learning function 1: Speed stepping format: w/o learning function 2: Speed switching format: w/ learning function 3: Speed stepping format: w/ learning function	0
52	713	Positioning direction	Designates whether positioning is to be executed in the FWD (forward) or RVS (reverse) direction.	0: FWD direction 1: RVS direction	0
53	714(L) 715(H)	Overshoot amount	Designates the target position overshoot amount when positioning occurs from the opposite direction as the prescribed positioning direction.	0 - 999999 (Decimal point position is according to the initial setting)	100
54	716(L) 717(H)	Medium-speed zone	Designates the distance (prior to the target position) over which medium-speed positioning is to occur.	0 - 999999 (Decimal point position is according to the initial setting)	10000
55	718(L) 719(H)	Low-speed zone	Designates the distance (prior to the target position) over which low-speed position is to occur.	0 - 999999 (Decimal point position is according to the initial setting)	1000
56	720(L) 721(H)	Stop zone	Designates the distance between the positioning target position and the point where the brake is to be applied.	0 - 999999 (Decimal point position is according to the initial setting)	100
57	722(L) 723(H)	In-position zone	Designates a reference distance (relative to the target position) used to determine if motion is stopped at the correct target position.	0 - 999999 (Decimal point position is according to the initial setting)	100
58	724(L) 725(H)	Upper limit (+ limit)	Designates the '+' direction limit value.	-99999 - 999999 (Decimal point position is according to the initial setting)	999999
59	726(L) 727(H)	Lower limit (- limit)	Designates the '-' direction limit value.	-99999 - 999999 (Decimal point position is according to the initial setting)	-99999
60	728	START from stop zone	Designates whether positioning is to occur when the START position is already within the stop zone.	0: Disable 1: Enable	1
61	729	Motion non-detection timer	Designates the period from the point when positioning is started until the point when the 'motion error' detection function begins.	0.00 - 99.99 sec (Fixed decimal point) Error detection will not occur if setting is '0.00'.	10.00
62	730	Motion misdirection non-detection timer	Designates the period from the point when positioning is started until the point when the 'motion direction error' detection function begins.	0.00 - 99.99 sec (Fixed decimal point) Error detection will not occur if setting is '0.00'.	10.00
63	731	'Positioning end' detection timer	Designates the delay period from the point when positioning control ends until the point when the 'positioning' signal goes OFF.	0.00 - 99.99 sec (Fixed decimal point)	0.10
64	732	JOG low-speed timer	Designates the low-speed operation period for the JOG operation.	0.00 - 99.99 sec (Fixed decimal point) If the setting is '99.99', low-speed will be designated for the entire operation.	99.99

7.4.2 Function selection

This section explains how to set the function selection.

The A1S62LS consists of 3 major functions:

The 'limit switch output function', the 'positioning function' and 'current position detection function'.

The function which is to be used is designated by this 'function selection' parameter setting.

The setting selections are as follows:

0: For both 'limit SW output function' and 'positioning function' (of the 16 channel outputs, channels 0 - 7 are used for the limit SW output function, and channels 8 - 15 are used for the positioning function).

1: Limit SW output function only (all 16 of the channel outputs are used for the limit SW output function).

2: Current position detection function only (all of the channel outputs turn OFF).

The 'function selection' setting is made at address 711.

7.4.3 Selection of positioning format

The A1S62LS features two positioning formats:

The 'speed switching' and 'speed stepping' formats. The positioning format selection is designated at parameter as follows:

0: Speed switching format: w/o learning function

1: Speed stepping format: w/o learning function

2: Speed switching format: w/ learning function

3: Speed stepping format: w/ learning function

Set the desired positioning format to buffer memory address 712.

7.4.4 Designation of positioning direction

The positioning direction (for unidirectional position) is designated as FWD (forward) or RVS (reverse).

The positioning direction is designated by the parameter setting as follows:

0: FWD direction

1: RVS direction

Set the desired positioning direction to buffer memory address 713.

7.4.5 Desiganation of overshoot amount

The 'overshoot amount' is effective during unidirectional positioning operations, designating how far the target position is to be overshot when positioning is executed from the opposite direction as the prescribed positioning direction.

The overshoot amount is designated within a setting range of 0 to 999999.

The decimal point position will be according to the initial setting.

If the overshoot amount is designated as '0', bidirectional positioning (FWD and RVS) will occur.

Set the desired overshoot amount to buffer memory addresses 714 (L) and 715 (H).

7.4.6 Designation of medium-speed zone, low-speede zone, stop zone, and In-position zone

The 'medium-speed zone' setting is used only with the 'speed stepping' positioning format, and designates the distance (prior to the target position) over which medium-speed positioning is to occur.

The 'medium-speed zone' setting is designated at address 716 (L) and 717 (H).
This setting is inoperative when the 'speed switching' positioning format is used.

The 'low-speed zone' setting designates the distance (prior to the target position) over which low-speed positioning is to occur.
The 'low-speed zone' setting is designated at address 718 (L) and 719 (H).

The 'stop zone' setting designates the distance between the point where the positioning brake is applied, and the target position.
The 'stop zone' setting is designated at address 720 (L) and 721 (H).

The 'In-position zone' setting designates a reference distance from the target position, with this distance being used to determine if positioning has stopped at the target position.
The 'In-posiiton zone' setting is designated at address 722 (L) and 723 (H).

The setting range for each of the above zones is 0 to 999999.

The decimal point position will be according to the initial setting value.

7.4.7 Desiganation of upper and lower limits

If the ABSOCODER sensor current position value exceeds the upper limit value, the A1S62LS will turn the X2 signal ON. If it exceeds the lower limit value, the X3 signal will be turned ON.

Even if the X2 or X3 signal comes ON, A1S62LS operation will be continued. If desired, a stop can be designated in the sequence program.

The setting range for the upper/lower limit is -99999 to 999999.

The decimal point position is according to the initial setting.

The 'upper limit' setting is designated at address 724 (L) and 725 (H), and the 'lower limit' setting at address 726 (L) and 727 (H).

7.4.8 Start from stop zone setting

This setting determines whether or not positioning will be executed when the 'positioning START' position is already in the stop zone. The 'START from stop zone' setting is designated at address 728:

0: Disabled

1: Enabled

7.4.9 Timer settings

The procedure for designating the 'motion non-detection timer', 'motion misdirection non-detection timer', 'positioning END detection timer', and 'JOG low-speed timer' settings is explained below.

(1) The 'motion non-detection timer' setting designates the period from the point when the positioning or JOG operation is started, until the point when the motion error detection function begins.

(a) The setting range for this timer is 0.00 to 99.99 secs.

(b) If this timer setting is designated as '0.00', motion error detection will not occur.

(c) This timer setting is designated at address 729.

(2) The 'motion misdirection non-detection timer' setting designates the period from the point when the positioning or JOG operation is started, until the point when the motion direction error detection function begins.

(a) The setting range for this timer is 0.00 to 99.99 secs.

(b) If this timer setting is designated as '0.00', motion direction error detection will not occur.

(c) This timer setting is designated at address 730.

(3) The 'positioning END timer' setting designates the delay period from the point when positioning is ended, until the point when the 'positioning' signal (CH. 14) goes OFF.

(a) The setting range for this timer is 0.00 to 99.99 secs.

(b) This timer setting is designated at address 731.

(4) The 'JOG low-speed timer' setting designates the low-speed period during the JOG operation.

(a) The setting range for this timer is 0.00 to 99.99 secs.

(b) If a setting of '99.99' is designated, the entire JOG operation will be executed at low-speed.

(c) This timer setting is designated at address 732.

7.5 Programming

This section explains how to create the sequence program using the A1S62LS for positioning operation.

7.5.1 Intial setting and parameter setting data write program

Refer to 5.5.2 for the initial setting and parameter setting data write program.

7.5.2 Program for positioning function

The following example shows a program used to designate the positioning target position and to start the positioning function.

Conditions

(1) The following signal assignments are used to control the A1S62LS:

A1S62LS 'online' command X32
'Target position change' command X33
Positioning START command X34
Positioning STOP command X35
Target position setting input commands .....X50 to X63
(digital SW, BCD 5-digit)
.....X64
(digital SW, symbols)
'Target position setting error' display YA0
(This example applies when outside a range of 2000 - 34000.)
'Stopped outside target range' error display YA1
Target position setting storage register D50, D51

(2) The program creation and operation procedure is as follows:

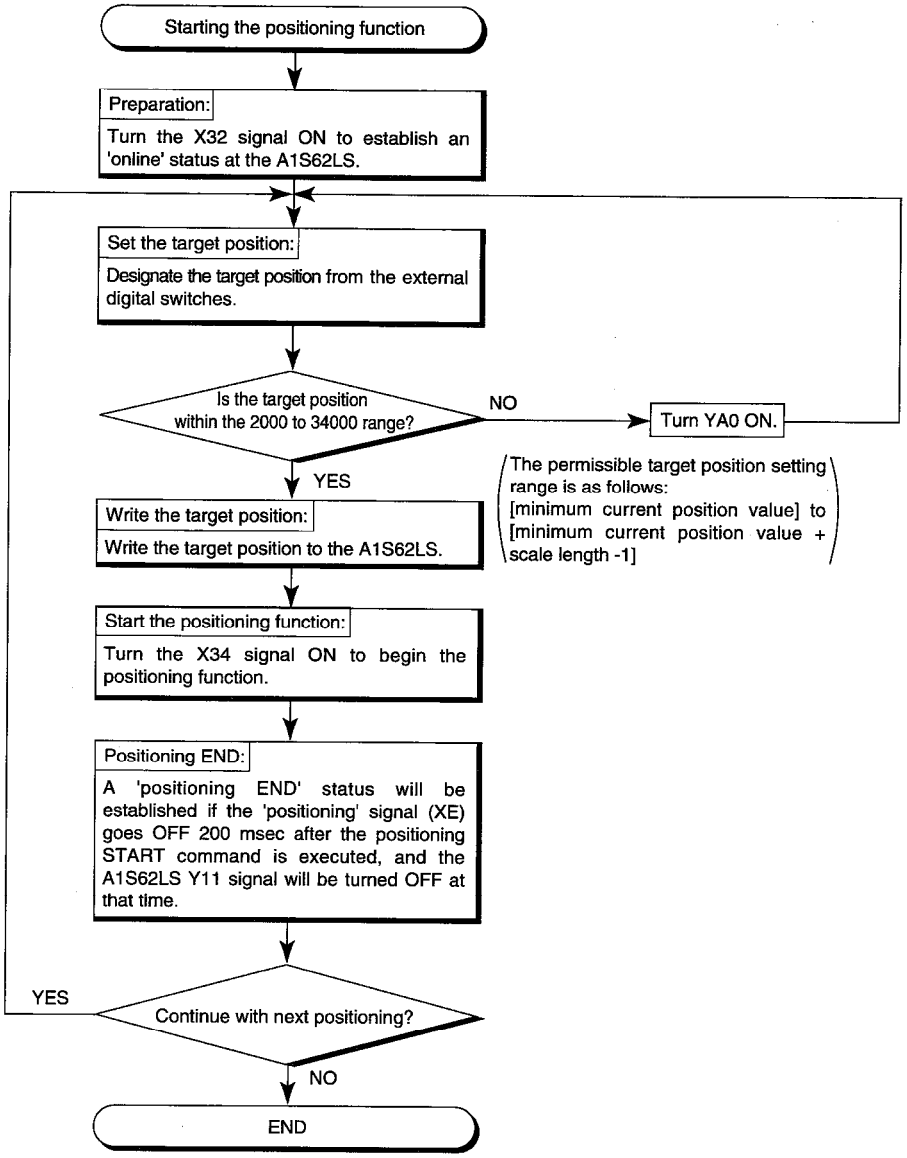

Program Example

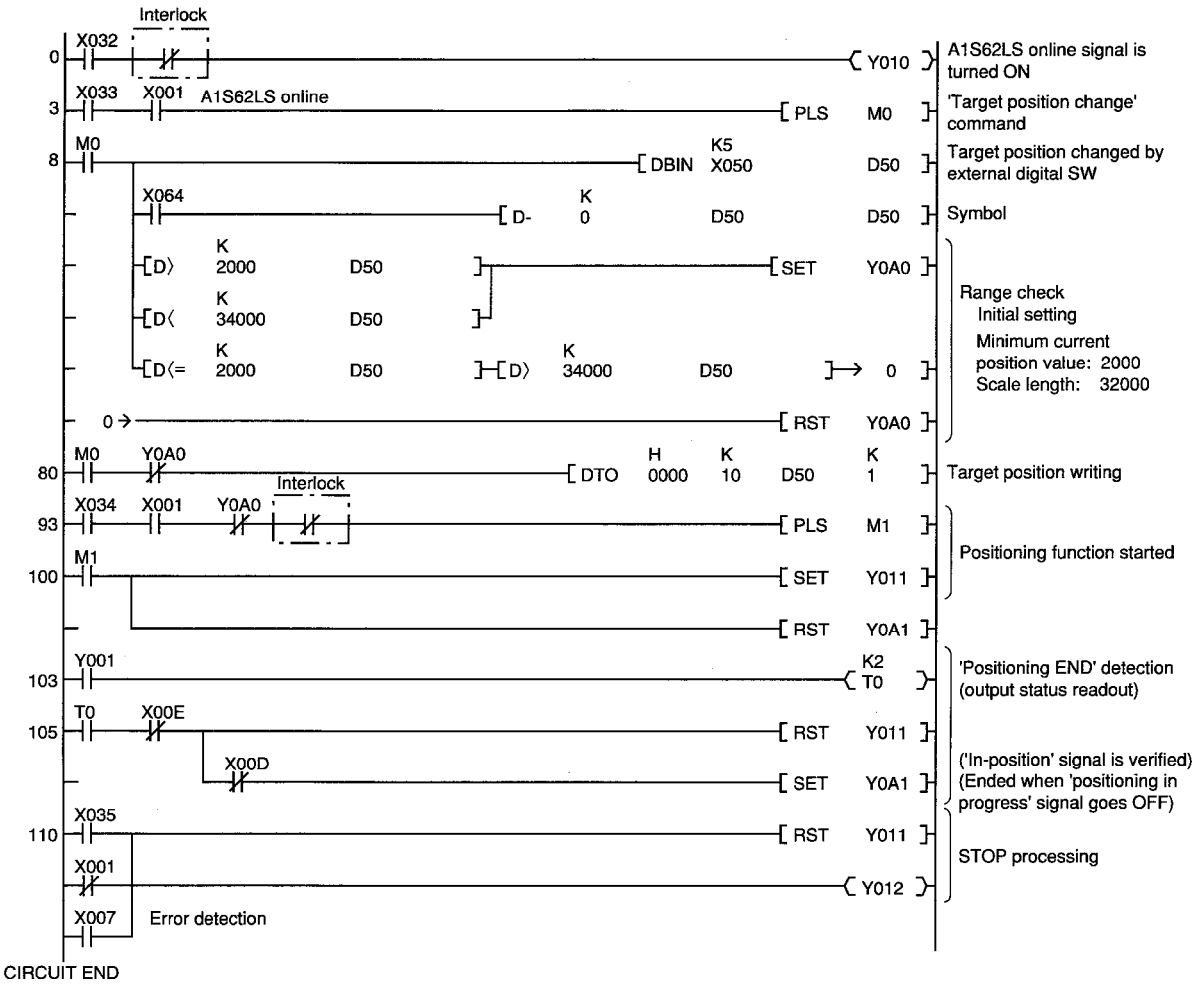

Explanation

(1) The positioning function begins when the Y10 and Y11 signals turn ON.

(2) X1 is the ON signal when an A1S62LS online status has been established (Y10 ON).

(3) The output status can be verified by the A1S62LS X8 to XF signals:

X8.....FWD
X9.....RVS
XA .....High-speed
XB .....Low-speed
XC .....Brake release
XD .....In-position
XE .....Positioning in progress
XF.....Operation error

(4) The target position must be designated within the following range:

[Minimum current position value] to [minimum current position value + scale length -1].

A range check is executed by the sequence program.

(5) A 'positioning END' status is established if the 'positioning' signal (X1E) goes OFF 200 msec after the positioning START signal is turned ON.

7.5.3 Program for JOG operation

Conditions

The following signal assignments are used to control the A1S62LS:

A1S62LS 'online' command X32

'JOG mode selection' command.....X33

CW JOG command X34

CCW JOG command.....X35

Program Example

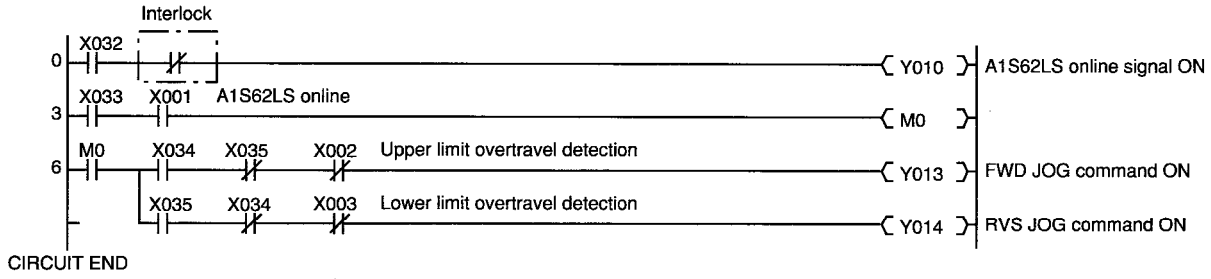

Explanation

(1) X1 is the ON signal when an A1S62LS online status has been established (Y10 ON).

(2) X2 is the 'upper-limit overtravel' detection signal.

(3) X3 is the 'lower-limit overtravel' detection signal.

(4) JOG operation begins when the Y10 and Y13 (or Y14) signals turn ON.

IMPORTANT

If the motor wiring is incorrect, the RVS signal may be turned ON when the FWD signal is designated. Be sure the wiring is correct.

For the JOG operation, the following interlock conditions are required at the sequence program:

(1) Simultaneous FWD and RVS operation.

(2) FWD and upper-limit overtravel (X2).

(3) RVS and lower-limit overtravel (X3).

7.5.4 Remote I/O station programming

The master station (ACPU) programming which is required when the A1S62LS is installed at a remote station is explained below.

(1) Notes on Programming:

There are two ACPU input/output control modes: the 'direct' mode, and the 'refresh' mode. However, for data communication with a remote I/O station, the 'refresh' mode is used after the END (FEND) instruction is executed.

Please note the following precautions when the A1S62LS is installed at a remote I/O station. For details regarding data link specifications, refer to the User's Manual for the data link module.

(a) There is a time lag (response delay) in the communication of control data between master and remote I/O stations which must be allowed for when specifying the system.

Therefore, care must be taken when designating the control timing.

(b) The following instructions are used for data communication with the remote I/O station A1S62LS:

Data writing from the master station to the remote I/O station A1S62LS: RTOP instruction.

Data reading from the remote I/O station A1S62LS to the master station: RFRP instruction.

Data communication between the master station CPU and the A1S62LS occurs at the 'link register (W)'. Therefore, when required, a processing program should be included just after the RFRP instruction where the link register data is to be transferred to another device, or just prior to the RTOP instruction where the transfer data is to be transferred to the link register.

(c) The RTOP and RFRP commands cannot be executed simultaneously (within 1 scan) for a single remote I/O station A1S62LS. (If there are two A1S62LS's installed at the remote I/O station, the above instructions can be executed simultaneously provided that the RTOP instruction is for the No. 1 A1S62LS, and the RFRP instruction is for the No. 2 A1S62LS.)

For this reason, the signals shown on the following page must be integrated with the interlock conditions.

Although all the input/output signals are assigned from the master station, in the following example they are shown as signals for the X0 - 1F, Y0 - 1F devices.

(d) Control signals to A1S62LS:

Depending on the relationship between the master station's scan time and the link scan time, the Y□□ signal sent to the remote I/O station may not be output as PLS Y □□.

Due to the 'refresh' mode which is used after data communication between the master station and the remote I/O station has been ended by the END (FEND) instruction, the pulse output which executes the RST instruction (after SET instruction is executed) cannot be used.

Signal Direction: PC CPU → A1S62LS		Signal Direction: A1S62LS → PC CPU	
Device No.	Signal Name	Device No.	Signal Name
Y0 - YC	User operation prohibited	X10 - X1C	User operation prohibited
YD	Signal for turning X1D OFF.	X1D	Comes ON when RFRP/RTOP instructions cannot be executed due to an error at a special function module.
YE	When RFRP instruction is executed (from master station CPU to Link module transfer), master station CPU is turned ON. After verifying X1E ON status, a reset at the user program is required.	X1E	Remote station A1S62LS comes ON while RFRP instruction is being processed.
YF	When RTOP instruction is executed (from master station CPU to Link module transfer), master station CPU is turned ON. After verifying X1F ON status, a reset at the user program is required.	X1F	Remote station A1S62LS comes ON while RTOP instruction is being processed.

When RFRP/RTOP instructions cannot be executed due to an error at a special function module.

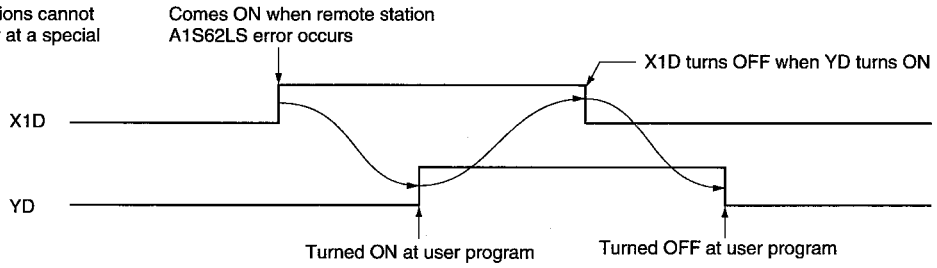

When RFRP instruction is executed

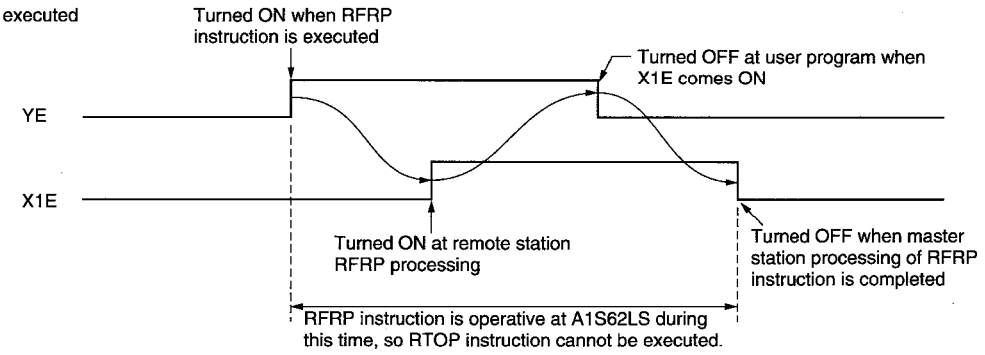

When RTOP instruction is executed

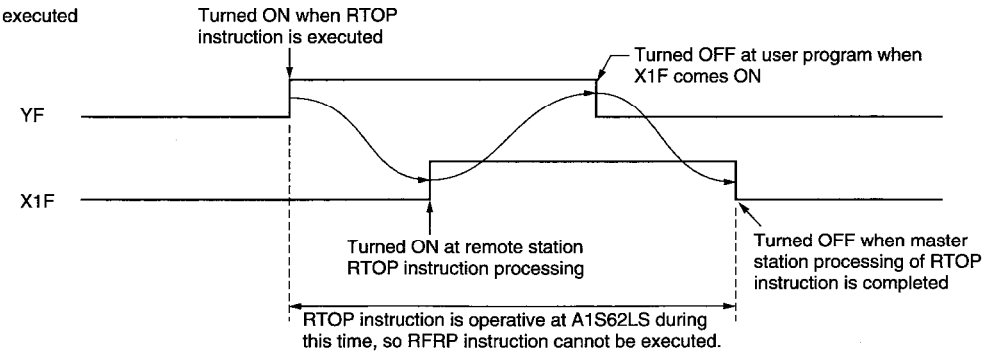

(2) Program Example

The following program example is used to start the limit switch output function and to change a program No., with the remote I/O station A1S62LS unit (X, Y130 - 14F device No.) being controlled by the signals assigned from the master station.

Conditions

(a) The following signal assignments are used to control the A1S62LS:

A1S62LS 'online' command X152

'Target position change' command X153

Positioning START command.....X154

Positioning STOP command X155

Target position setting value input.....X170 to X183

(Digital SW, BCD 5-digit)

.....X184

(Digital SW, symbol)

'Target position setting error' display.....Y1C0

(This example applies when outside a range of 2000 to 34000)

'Stopped outside target range' error display Y1C1

Target position setting storage register W50, 51

(b) The program creation and operation procedure is as follows:

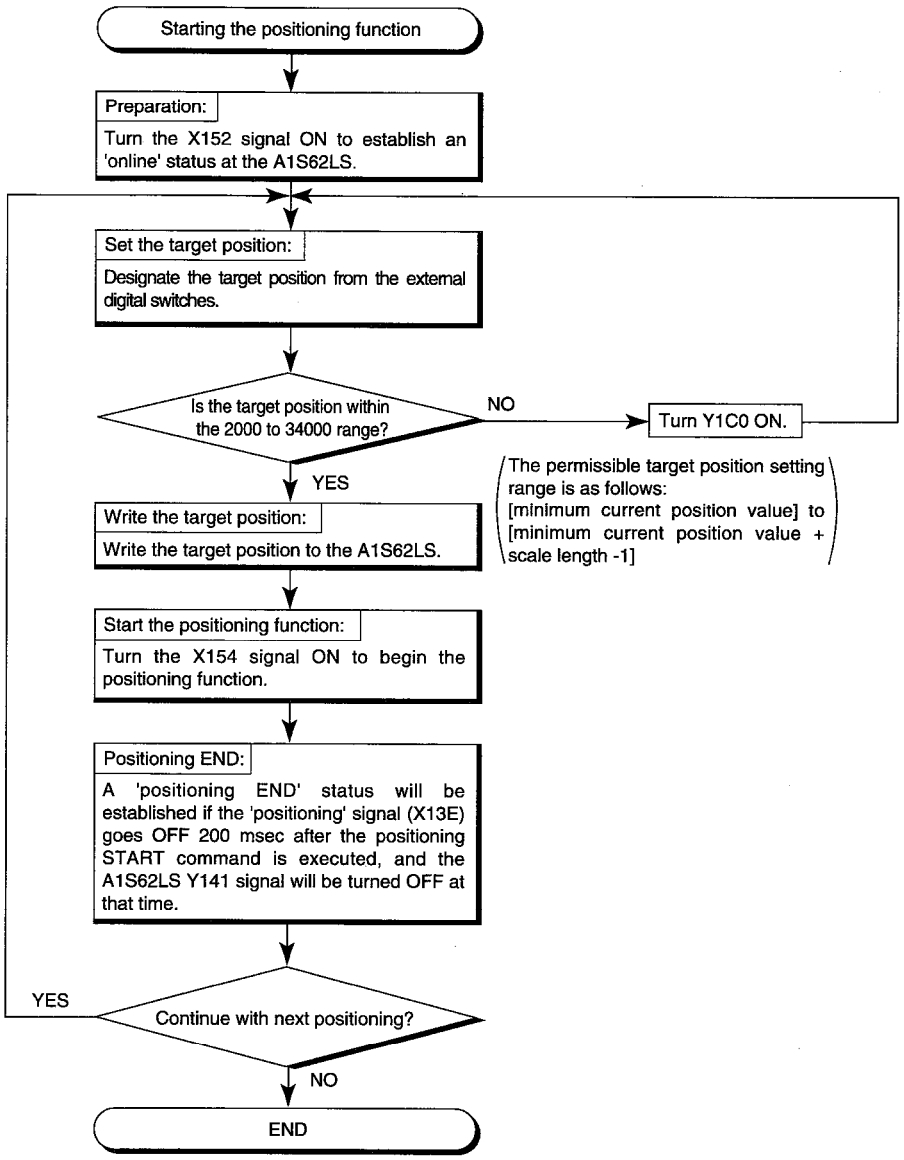

Program Example

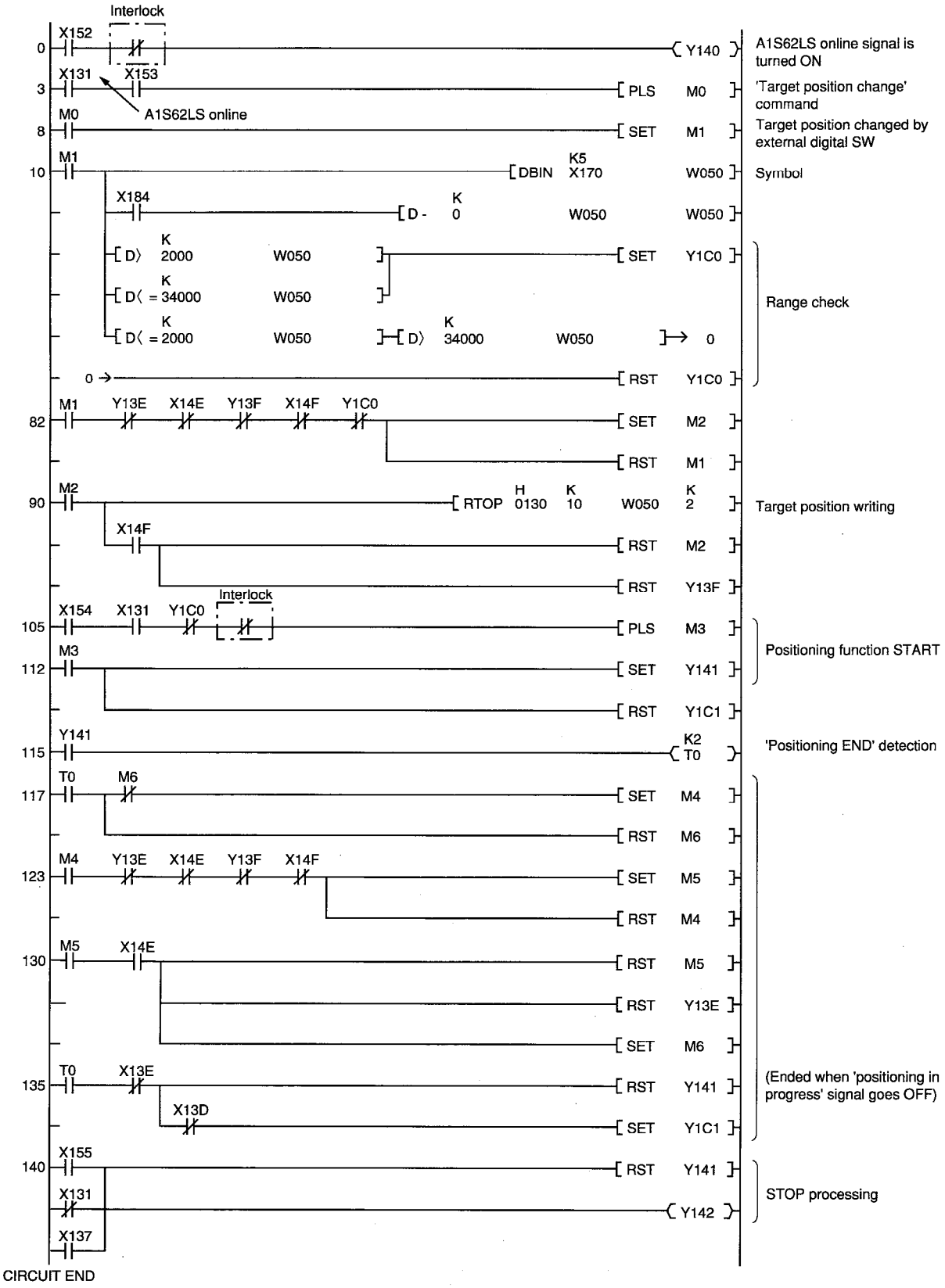

Explanation

(a) The positioning function is started when the Y140 and Y141 signals come ON.

(b) X131 is the ON signal when an A1S62LS online status has been established (Y140 ON).

(c) The output status at each channel can be verified by the A1S62LS X138 to X13F signals:

X138.....FWD
X139.....RVS
X13A .....High-speed
X13B .....Low-speed
X13C .....Brake release
X13D .....In-position
X13E .....Positioning in progress
X12F.....Operation error

(d) The target position must be designated within the following range:

[Minimum current position value] to [Minimum current position value + scale length -1]. A range check is executed at the sequence program.

(e) A 'positioning END' status is established if the 'positioning' signal (X13E) goes OFF 200 msecs after the positioning START signal is turned ON.

7.6 Operation

This section explains operation of the positioning function.

Set '0' to all bits of the buffer memory address 700 (sequence mode selection).

When using the VS-T62 (external setting unit), set the manual mode to RUN.

This state is called 'RUN mode'.

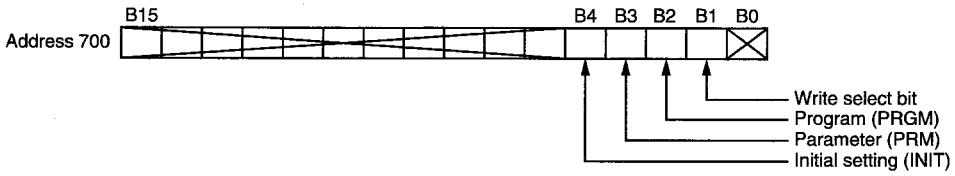

(1) The mode is cleared to RUN mode when the power supply is turned ON or the PC CPU is reset.

(2) RUN mode can prohibit the mode to be changed from the sequence program in manual mode.

Turn Y19 of the sequence program ON, and mode change will not be accepted.

7.6.1 Basic operation procedure

The basic procedure for executing the positioning function when in the RUN mode is shown below.

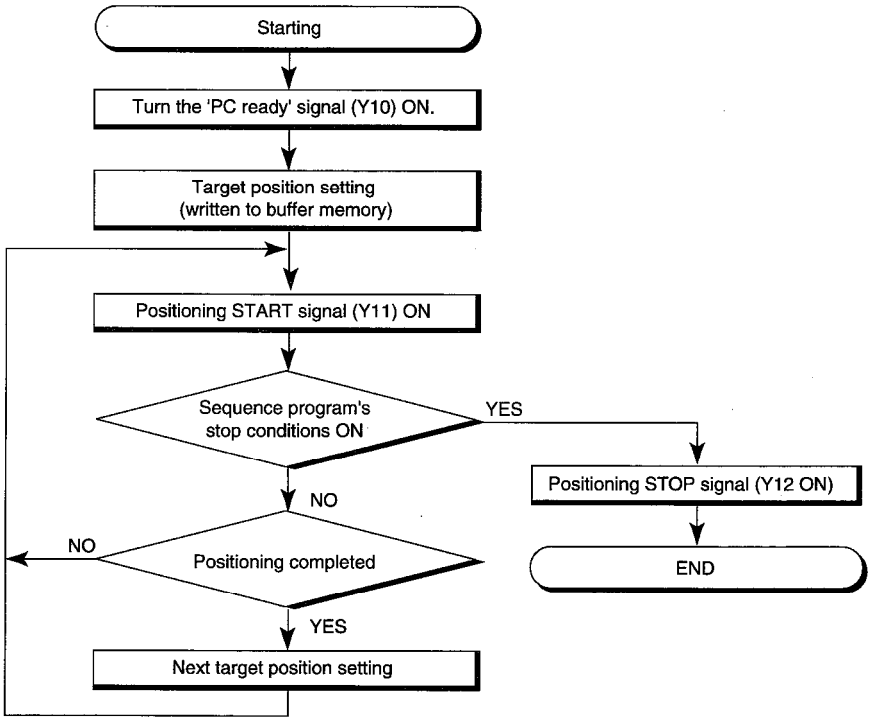

8. TROUBLESHOOTING

A1S62LS operation errors and troubleshooting procedures are described in this section.

8.1 Error Code List

The A1S62LS error codes are described below. When the A1S62LS detects an error, the corresponding error code is stored at address 7 of the buffer memory. At that time, the appropriate error signal (X2 to X6) is output, and the 'error detection' signal (X7) is turned ON. When this occurs, the error code will be displayed at the 'data display' area. An example of an error code display is shown below.

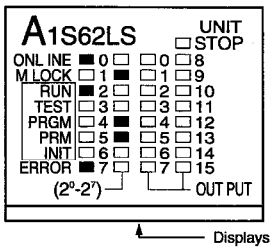

Displays the error code as the binary code (Ex.: Error code :50)

Error Type	Error code	Description		When Detected	Countermeasure
'Buffer memory writing prohibited' errors	10 11	Activated when writing (by sequence program 'TO' instruction) is attempted at a buffer memory addresses 0 - 7 (writing prohibited).	Current position value area (scaling binary) (Address 0; Address 1)	During online status	Revise the sequence program so that writing is not attempted at a 'writing prohibited' area of the buffer memory.
	12 13		Current position value area (sensor binary) (address 2; Address 3)		
	14		All-channels output status area (Address 4)		
	15		Program No. answerback area (Address 5)		
	16		Manual mode area (Address 6)		
	17		Error code area (Address 7)		
	18	Activated when writing (by sequence program 'TO' instruction) is attempted at a buffer memory addresses 668 - 677 and 701 (writing prohibited).	Speed output area (addresses 668, 669)		
			Hold current position area (scaling binary) (addresses 670, 671)		
			Hold current position area (sensor binary) (addresses 672, 673)		
			FWD stop zone area after learning (addresses 674, 675)		
			RVS stop zone area after learning (addresses 676, 677)		
			Sequence mode answerback area (address 701)		
Detection errors	20	A1S62LS detected an 'upper-limit overtravel' condition.		During online status	- Move the machine back within the 'lower-limit to upper-limit' range. - Revise the positioning setting data. - Revise the positioning parameter settings. - Revise the 'lower-limit/upper-limit' settings.
	21	A1S62LS detected a 'lower-limit overtravel' condition.			
	22	A1S62LS detected a sensor error. Sensor error causes are as follows: - ABSOCODER sensor is disconnected. - Severed/disconnected ABSOCODER connector cable. - Malfunction in A1S62LS position detection circuit.		Always	- Connect the ABSOCODER sensor if disconnected. - Replace the ABSOCODER sensor. - Check the electrical condition of the sensor cable. (continuity, shorts) - If the problem appears to be caused by a malfunction at the A1S62LS position detection circuit, please contact your service representative.
	23	A1S62LS detected an excessive correction amount (during preset operation). 'Excessive correction amount' causes are as follows: - Misalignment between ABSOCODER sensor's detected position and actual position, caused by machine slippage, backlash, etc. - Deviation in the position where 'current position preset' input signal is received. - Incorrect 'permissible correction amount' parameter setting.		During 'current position preset' operation. (In TEST mode, and when online)	- Adjust the machine. - Revise the 'permissible correction amount' parameter setting.

Error Type	Error code	Description	When Detected	Countermeasure
Detection errors	24	A1S62LS detected an 'excessive current position change' condition. The causes are as follows: - ABSOCODER MRE sensor rotation speed is too fast. - Incorrect 'permissible current position change amount' parameter setting. - Severed/disconnected ABSOCODER connector cable. - ABSOCODER sensor malfunction. - A1S62LS position detection circuit malfunction.	Always	- Check the ABSOCODER sensor' s speed. - Revise the 'permissible current asetting. - Replace the ABSOCODER sensor, and check the electrical (continuity shorts) condition of the sensor cable. - If the problem appears to be caused by a malfunction at the A1S62LS position detection circuit, please contact your service representative.
Learning data error	25	The stop zone corrected by the simple learning function has exceeded the low-speed zone.	During TEST mode operation and upon completion of online positioning	- Check the 'operation output' connections. - Adjust the machine. - Revise the positioning parameter setting.
Blown fuse	26	Fuses built into the A1S62LS are blown.	Always	The A1S62LS needs repairs. Return it to your nearest service representative.
Control errors	30	Numeric values other than 0 - 8 were designated at the limit SW function's program No.	While online or when program reading and writing is attempted using PRGM in sequence mode.	Revise the sequence program so that no numeric values other than 0 - 8 will be written at the buffer memory.
	31	The data set to the limit switch output ON/OFF data setting area is incorrect.	- When program No. 0 is selected while 'online'. - When a PRGM mode 'program 9 →0' copy operation (buffer memory to internal memory) occurs. - When program writing is attempted using PRGM in sequence mode.	Enter the correct data setting.
	40	START input inoperative. The causes may be as follows: - 'Limit SW output function only' is designated at the 'function selection' parameter setting. - An offline status exists. - 'Operation error' (CH. 15) is ON. - JOG operation is in progress. - Positioning STOP signal (Y12) is ON.	When 'start' is input other than during online positioning	Check each of the probable causes, and make the necessary corrections.
	41	The positioning target data is outside the detection range.	During TEST mode operation. When online positioning START occurs.	- Designate the correct target position setting value for the positioning operation. - Revise the scale length, minimum current position value, and overshoot amount settings.

Error Type	Error code	Description	When Detected	Countermeasure
Control errors	42	A1S62LS detected a 'motion error' (no motion) during an 'operation output' ON.	- During TEST mode operation. - During online positioning. - During online JOG operation.	- Check the 'operation output' connections. - Check the motor control unit. - Revise the 'motion non-detection timer' setting.
	43	A1S62LS detected a 'motion direction error' (motion in opposite direction) during an 'operation output' ON.		- Check the 'operation output' connections. - Check the motor. - Revise the 'motion misdirection non-detection timer' setting.
	50	A 'current position preset' was attempted to a point outside the detection range.	During TEST mode operation, and during an online 'current position preset' operation.	- Revise the 'current position preset' value. - Revise the scale length and minimum current position value.
Data errors	60	A1S62LS detected a parameter setting error.	- When power is turned ON. - When program switching occurs. - When positioning START occurs.	Correct the parameter setting.
	61	A1S62LS detected a program No. 1 setting error.	When power is turned ON, and when switching to the program in question.	Re-designate the setting data.
	62	A1S62LS detected a program No. 2 setting error.		
	63	A1S62LS detected a program No. 3 setting error.		
	64	A1S62LS detected a program No. 4 setting error.		
	65	A1S62LS detected a program No. 5 setting error.		
	66	A1S62LS detected a program No. 6 setting error.		
	67	A1S62LS detected a program No. 7 setting error.		
	68	A1S62LS detected a program No. 8 setting error.		
	69	A1S62LS detected a current position setting error.	When power is turned ON.	Set data to buffer memory addresses 709 (L) and 710 (H).
	70	Data writing error occurred.	In the INIT, PRM, and PROGRAM modes.	Re-designate the setting.
Buffer memory data errors	110	Activated when writing (using sequence program 'TO' instruction) is attempted in a 'writing enabled' area (addresses 678 - 693, 700, 702 - 750) of the buffer memory.	Speed limit area (address 678)	During TEST mode and when online positioning START occurs.	Correct the sequence program to prevent incorrect data from being written to the buffer memory.
	112		Medium-speed zone area (addresses 680 and 681)	
	113		Low-speed zone area (addresses 682 and 683)	
	114		FWD stop zone area (addresses 684 and 685)	
	115		RVS stop zone area (addresses 686 and 687)	
	116		In-position zone area (addresses 688 and 689)	
	117		Current position preset input 1 area (addresses 690 and 691)	During preset status
	118		Current position preset input 2 area (addresses 692 and 693)	
	130		Sequence mode selection area (address 700)	During parameter data loading at sequence mode
	190		Sensor rotation direction area (702)	
	191		Decimal point position area (address 703)	
	192		Scale length area (addresses 704 and 705)	
	193		Minimum current position value area (addresses 707 and 708)	
	194		Current position setting area (addresses 709 and 710)	
	150		Function area (address 711)	
	151		Positioning format area (address 712)	
	152		Positioning direction area (address 713)	
	153		Overshoot amount area (addresses 714 and 715)	
	154		Medium-speed zone area (addresses 716 and 717)	
	155		Low-speed zone area (addresses 718 and 719)	
	156		Stop zone area (addresses 720 and 721)	
	157		In-position zone area (addresses 722 and 723)	

Error Type	Error code	Description		When Detected	Countermeasure
Buffer memory data errors	158	Activated when writing (using sequence program 'TO' instruction) is attempted in a 'writing enabled' area (addresses 678 - 693, 700, 702 - 750) of the buffer memory.	Upper limit value area (addresses 724 and 725)	During parameter data loading at sequence mode	Correct the sequence program to prevent incorrect data from being written to the buffer memory.
	159		Lower limit value area (addresses 726 and 727)		
	160		Start from stop zone area (address 728)		
	161		Motion non-detection timer (address 729)		
	162		'Motion misdirection non-detection timer' area (address 730)		
	163		Positioning end detection timer area (address 731)		
	164		JOG low-speed timer area (address 732)		
	165		No. of protected channels area (address 733)		
	166		Offline channel output status area (not RUN mode) (address 734)		
	167		Offline channel output status area (RUN mode) (address 735)		
	168		Permissible current position change amount area (addresses 736 and 737)		
	169		Permissible correction amount area (addresses 738 and 739)		
	170		Current position preset function area (address 740)		
	171		FWD preset value 1 area (addresses 741 and 742)		
	172		RVS preset value 1 area (addresses 743 and 744)		
	173		FWD preset value 2 area (addresses 745 and 746)		
	174		RVS preset value 2 area (addresses 747 and 748)		
	175		Speed gate time area (address 749)		
	176		Speed sampling time area (address 750)		

(1) Each time an error occurs, the previous error code stored in the buffer memory will be deleted, and replaced by the new error code.

(2) The error code stored in the buffer memory will not be cleared (returned to '0') simply be correcting the cause of the error.

To clear the buffer memory error code, execute one of the following:

(a) Turn Y16 ON using the sequence program.

(b) Reset the PC CPU.

(c) Turn OFF the PC power supply.

(d) Press the [CLR] key on the VS-T62.

(e) Switch the current manual mode to another mode.

(f) Switch the sequence mode to RUN in manual mode.

(g) Switch RUN or TEST in manual mode to sequence mode.

(3) If any of the following errors occur during the JOG or positioning operations, the operation will be stopped (operation output OFF), and the 'operation error' output (CH. 15) will be turned ON:

(a) 'Sensor error' detected (error code 22).

(b) 'Motion error' detected (error code 42).

(c) 'Motion direction error' detected (error code 43).

The 'operation error' output can be turned OFF by correcting the problem and executing an 'error reset'.

In addition to the above errors, operation will also be stopped (operation output OFF) by any of the following errors during TEST mode positioning. However, the 'operation error' output will remain OFF.

(a) 'Excessive correction amount' detected (error code 23).

(b) 'Excessive current position change' detected (error code 24).

(c) 'Current position preset outside of detection range' detected (error code 50).

(d) 'Start input disabled' (error code 40)

(4) Once a 'sensor error' (error code 22) has been detected, and an error reset executed while in the INIT, PRM, or PRGM modes, subsequent 'sensor errors' will not be detected unless the power is turned OFF and back ON, or unless the mode is switched to the TEST or RUN mode.

With the exception of the 'current position' settings (address 709 (L) and 710 (H)), all other settings can be designated without connecting the ABSOCODER sensor.

(5) After an error has occurred, the positioning operation is re-started by the following procedure:

(a) Execute an error reset.

(b) Re-designated the target stop position setting.

(c) Press the [START] key.

(6) For buffer memory error codes 150 - 194, the lower two digits correspond to the initial setting number and the parameter number.

8.2 Troubleshooting Flowchart

The A1S62LS troubleshooting procedure is explained below.

For CPU module related problems, consult the manual for the CPU module in question.

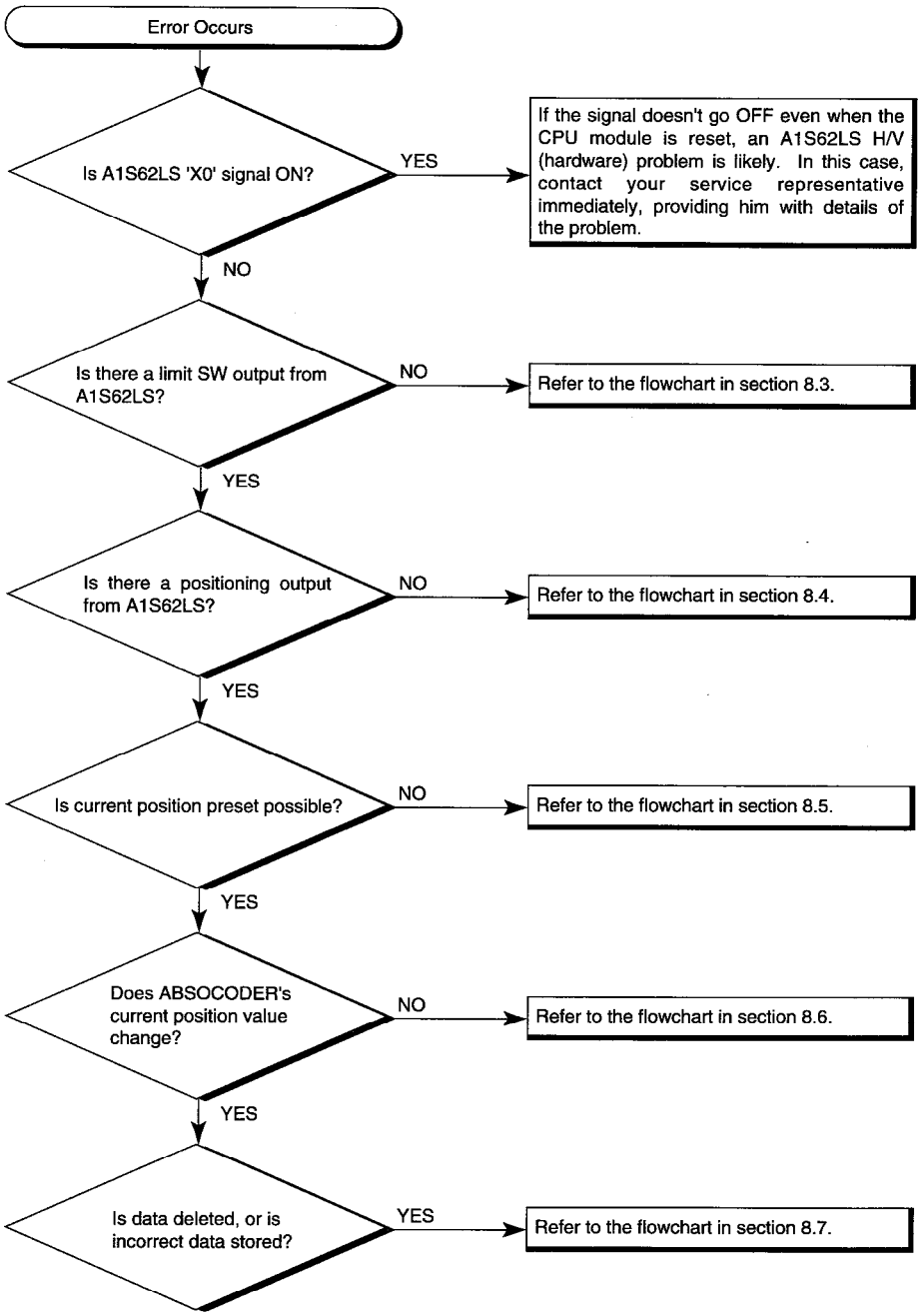

8.3 Flowchart for No Limit SW Output from A1S62LS

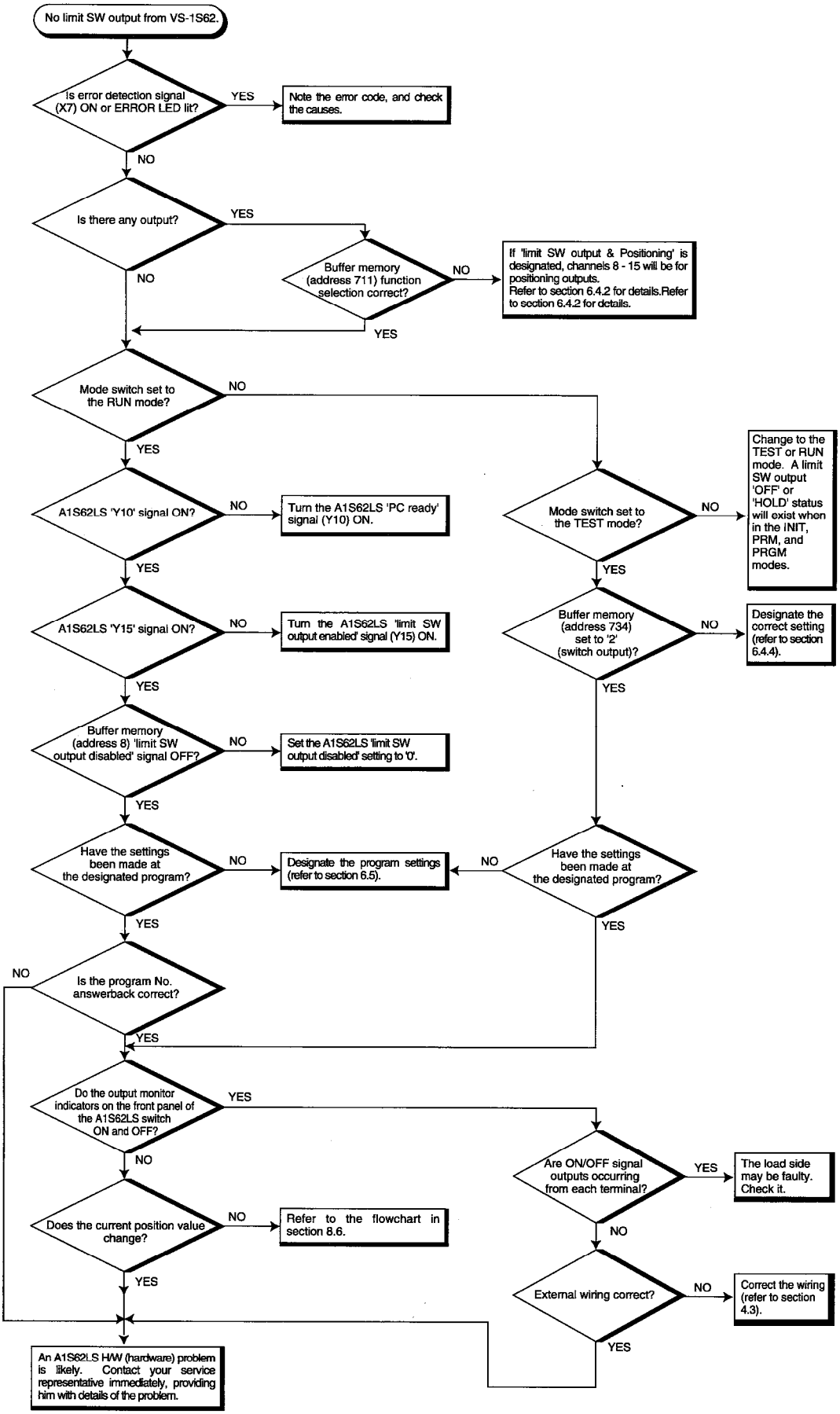

8.4 Flowchart for No Positioning Output from A1S62LS

8.5 Flowchart when Current Position Preset is Impossible

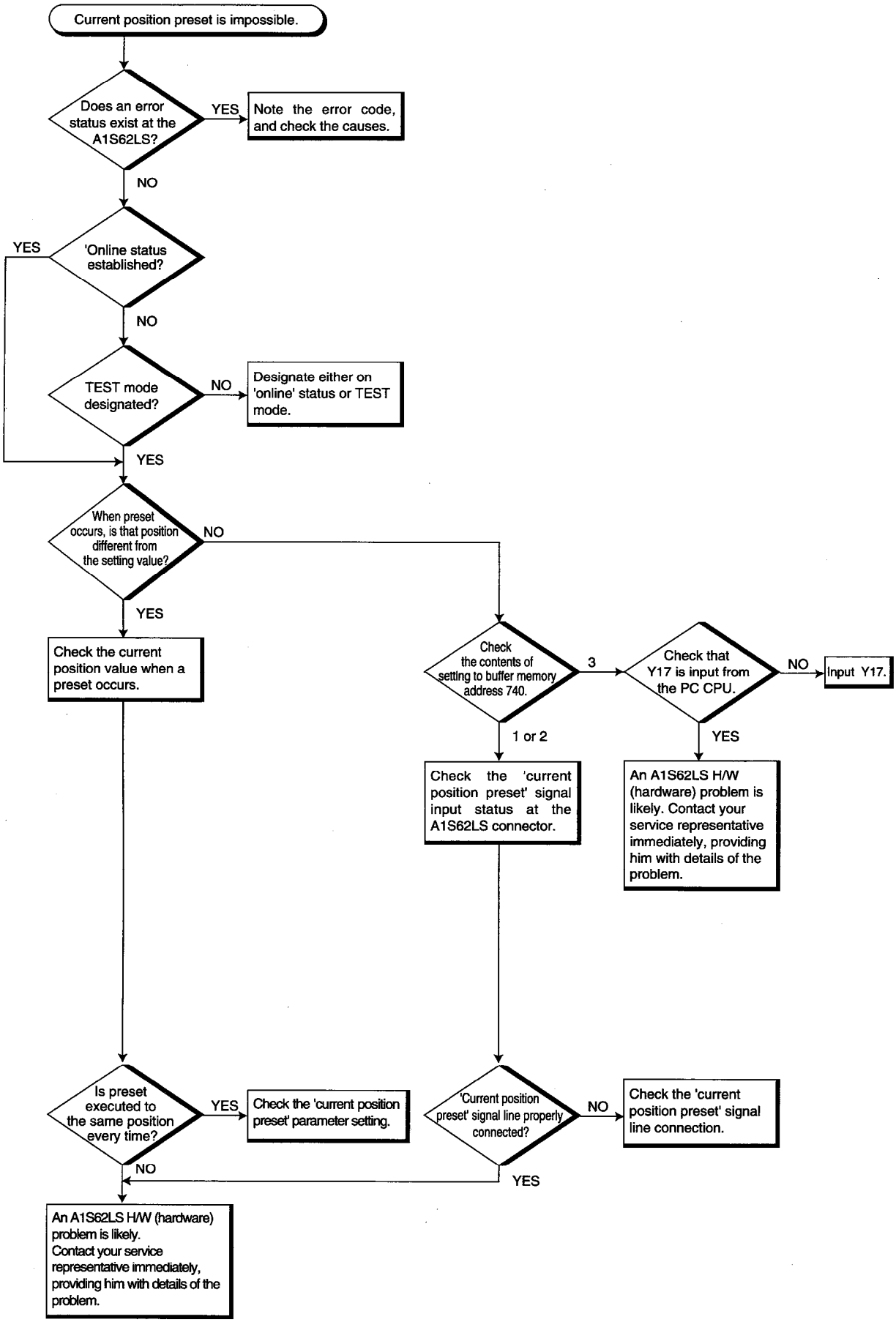

8.6 Flowchart when ABSOCODER's Current Position Value doesn't Change

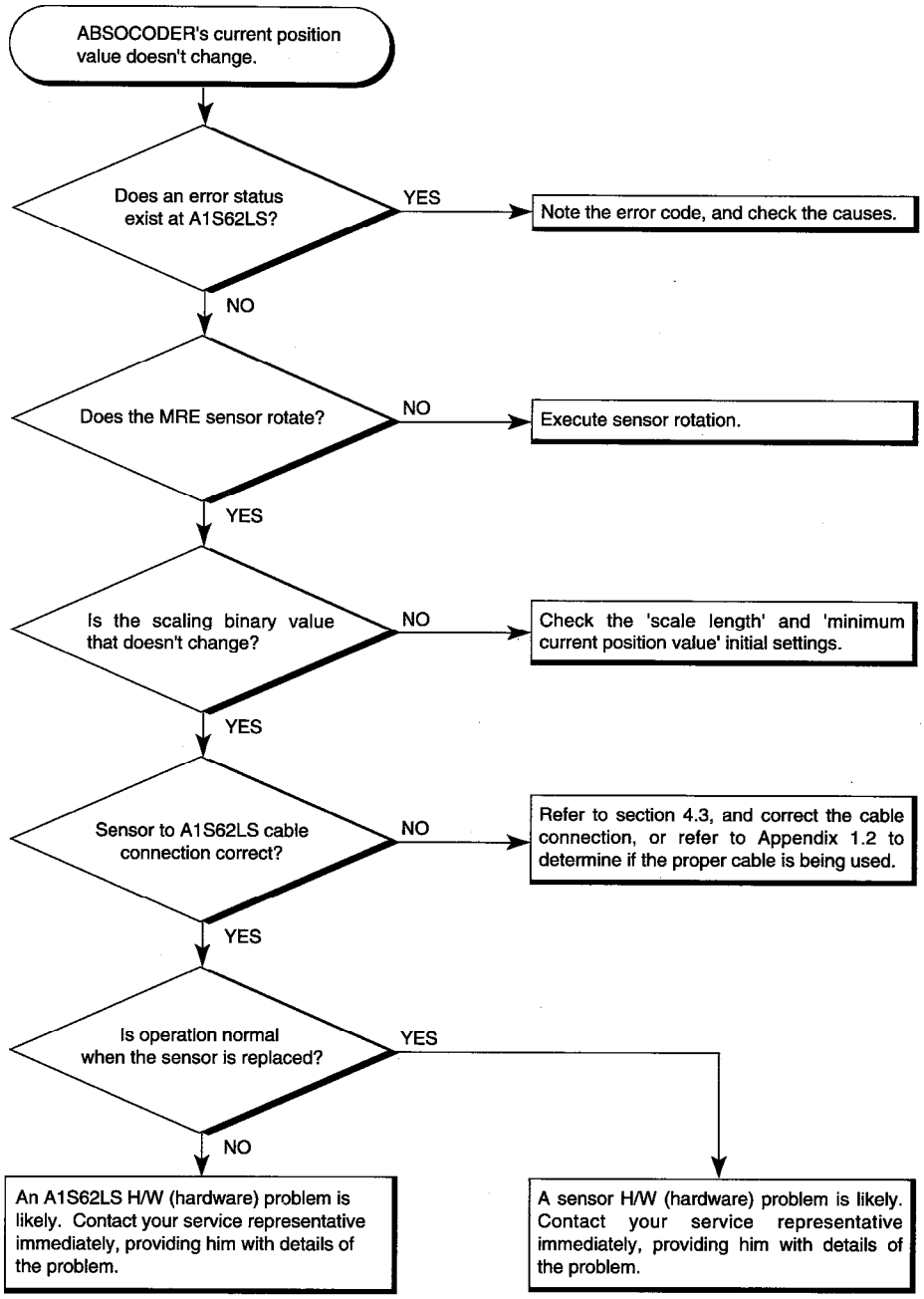

8.7 Flowchart when Stored Data is Lost, or when Erroneous Data is Stored

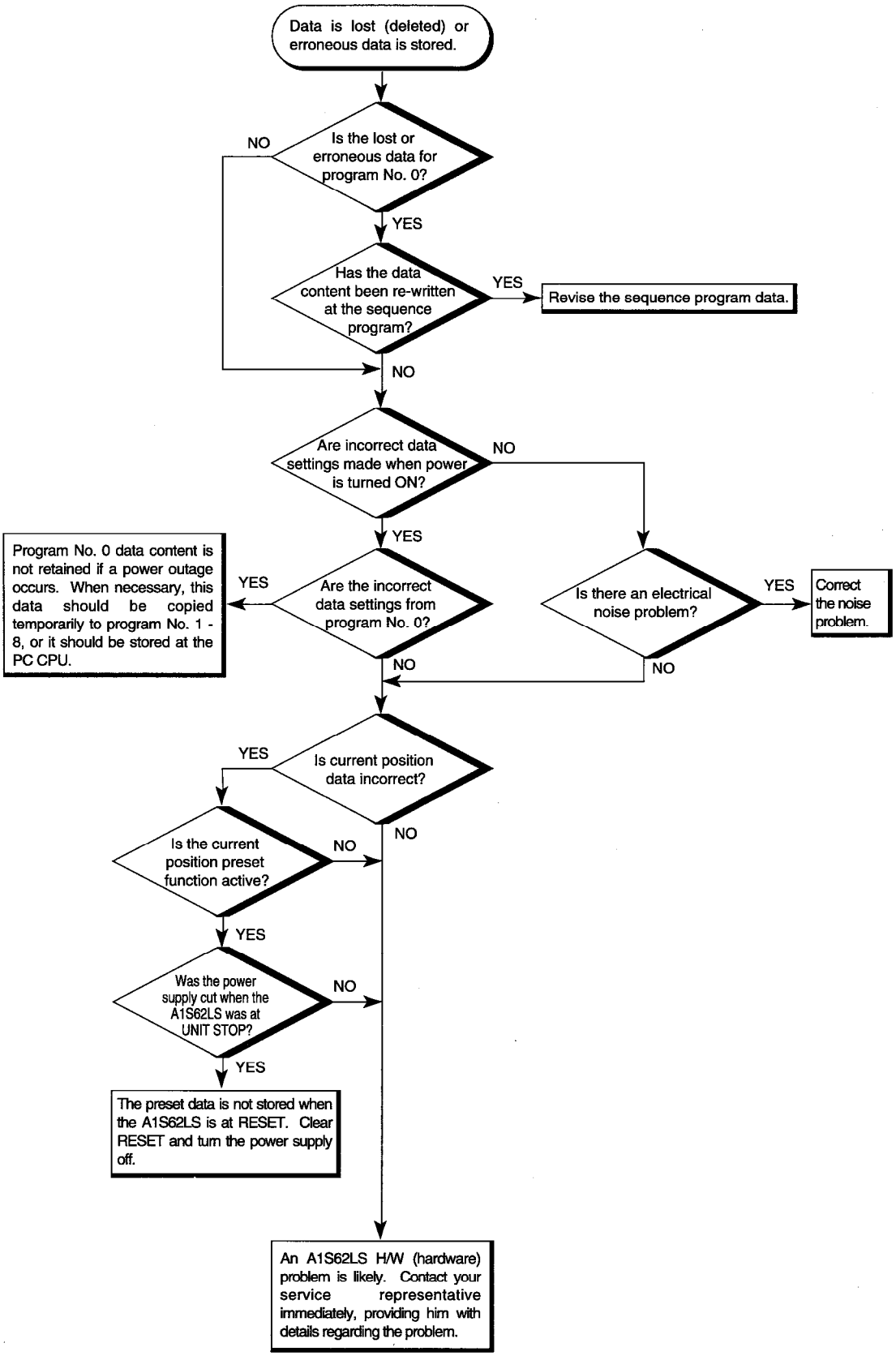

1. ABSOCODER SENSOR SPECIFICATIONS

1.1 ABSOCODER Sensor for A1S62LS

1.1.1 Specifications

Model Code		MRE-32SP062SAC	MRE-G□□□SP062FAC (see note 1)				
Outer dimensions	(mm)	62.5 dia. × 105 (Refer to dimensions)	62.5 dia. × 85.5 (Refer to dimensions)				
	(in.)	2.46 dia. × 4.13	2.46 dia. × 3.37				
Mass		1.4 kg (3.09 lb)	1 kg (2.21 lb)				
Division/Turn		4096	2048	1024	819.2	512	409.6
Number of turns		32	64	128	160	256	320
Linearity error		1° max.	2° max.	4° max.	5° max.	8° max.	10° max.
Moment of inertia	$GD^2/4$ {J}	5.9×10^{-2} kgf·m² {6.0×10^{-5} kgf·cm·sec²}	3.9×10^{-6} kg·m² {4×10^{-5} kgf·cm·sec²}				
Starting torque		4.9×10^{-2} N·m or less {0.5 kgf·cm or less}					
Permissible shaft load	Thrust	49 N {5 kgf}					
	Radial	98 N {10 kgf}					
Permissible mechanical speed		3600 r/min					
Ambient temperature	Storage	-30 to +90℃					
	Operating	-20 to +60℃					
Operating ambient humidity		20 to 90 % RH (Non-condensing)					
Vibration resistance		2.0×10^2 m/s² {20G} 200Hz, up/down 4 hrs, forward/back 2 hrs, Conforms to JIS D 1601 standard					
Shock resistance		4.9×10^3 m/s² {500 G} 0.5 ms, up/down/forward/back × 3 times each, Conforms to JIS C 5026 standard					
Construction		IP52F, Conforms to JEM 1030 standard					
Max. extension cable length	4P-S	100 m (328.1 ft)					
	4P-RBT	40 m (131.2 ft)	70 m (229.7 ft)				

Note 1: '□□□' indicates 64, 128, 160, 256, 320.

APPX

1.1.2 Absocoder sensor dimensions

(1) MRE-32 SP062SAC

Unit: mm (in.)

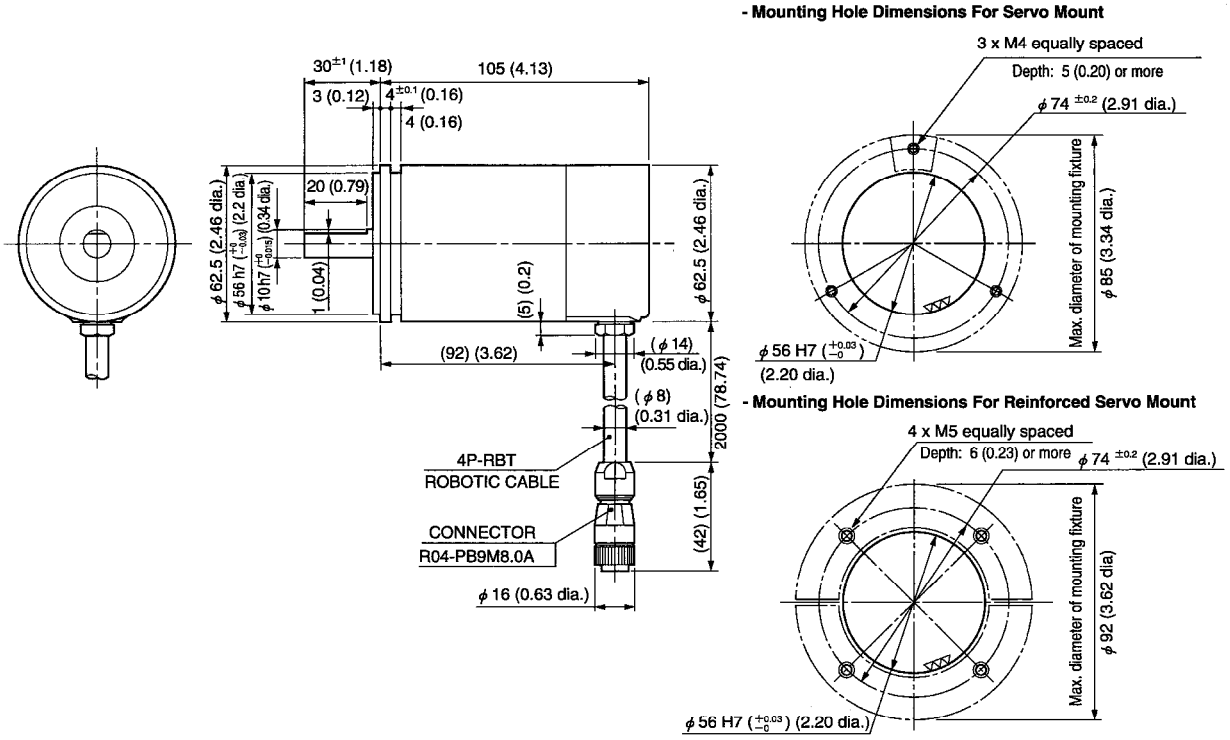

(2) MRE-G□□□SP062FAC

('□□□' indicates 64, 128, 160, 256, or 320)

Unit: mm (in.)

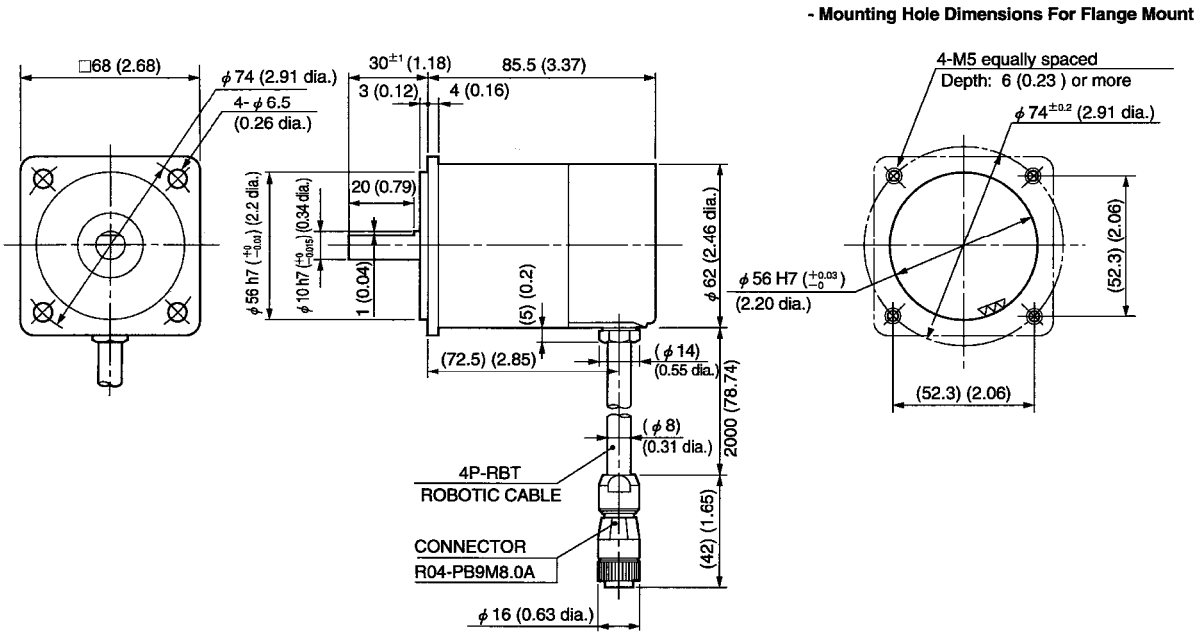

APPX

1.2 ABSOCODER Cable

The A1S62LS and ABSOCODER connector cable specifications are given below.

A 2-meter connector cable (robotic cable) is provided with MRE Series sensors.

Extension cables are available if required.

1.2.1 Specifications

Item \ Cable Name	Extension Cable	
Model Code	4P-S-FG-□□ ('□□' indicates length (m))	4P-RBT-FG-□□ ('□□' indicates length (m))
Type	Standard	Robotic
Insulating Material	Irradiated, formed polyethylene	ETFE plastic (resin)
Sheath	Polyvinyl chloride (PVC) compound (gray)	Polyvinyl chloride (PVC) compound (black)
Construction	2 pair without shield (2P) + 2 pair with shield (2P)	
Advantages	Longer extension distance is possible.	Very flexible; suitable for use with movable machine.
Length m (ft)	3, 5, 8, 10, 15, 20, 30, 50, 100 (10, 16, 26, 33, 49, 66, 98, 164, 328)	5, 8, 10, 15, 20, 30 (16, 26, 33, 49, 66, 98)

1.2.2 Cable length restrictions

The permissible length of the extension cable varies according to the ABSOCODER sensor model, as shown in the following table.

Sensor Model \ Cable Model	4P-S-FG	4P-RBT-FG
MRE-32SP062SAC	100 m (328 ft)	40 m (131 ft)
MRE-G64SP062FAC		70 m (230 ft)
MRE-G128SP062FAC		
MRE-G160SP062FAC		
MRE-G256SP062FAC		
MRE-G320SP062FAC		

The above lengths do not include the lengths of the cables provided with the MRE (MRE connector cable: 2 meters).

REMARKS

1. Contact your NSD representative (see Appendix 1.3 for information) regarding the combined use of the 4P-S-FG and 4P-RBT-FG cables for extension purposes.
2. Only the extension cables described above should be used with the ABSOCODER sensor.

   NSD cannot guarantee sensor specifications if other types of cables are used.

APPX

1.2.3 Absocoder dimensions

Extension Cable 4P-S-FG-[ℓ] and 4P-RBT-FG-[ℓ] (ℓ shown in meters)

Unit: mm (in.)

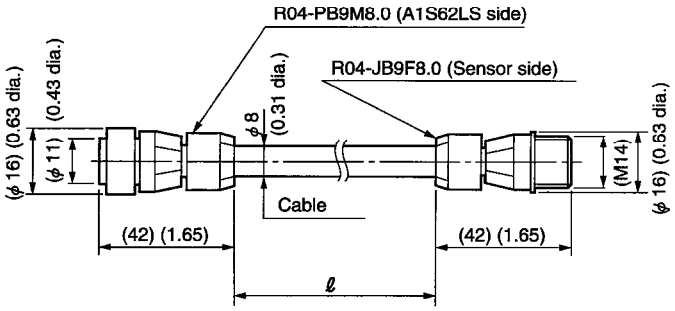

APPX

1.3 External Setting Unit (VS-T62)

1.3.1 Specifications

The table below shows the specifications of the external setting unit (VS-T62) used for the A1S62LS.

Item	Specifications	Remarks
Display	LED backlit LCD (16 characters x 2 lines)	
Key switch	Mechanical format (3 × 7)	
Power supply	Power is supplied, via connector, from the A1S62LS mounted on the base unit.	Use the designated cable (VS-C1S62-2)
Internal consumption current	0.45 A (5 VDC)	
External dimensions mm (in.)	230(H) x 98(W) x 37(D) (9.06 x 3.86 x 1.46)	
Mass	1.0 kg (2.21 lb)	

1.3.2 External setting unit dimensions (VS-T62: made by NSD)

Unit: mm (in.)

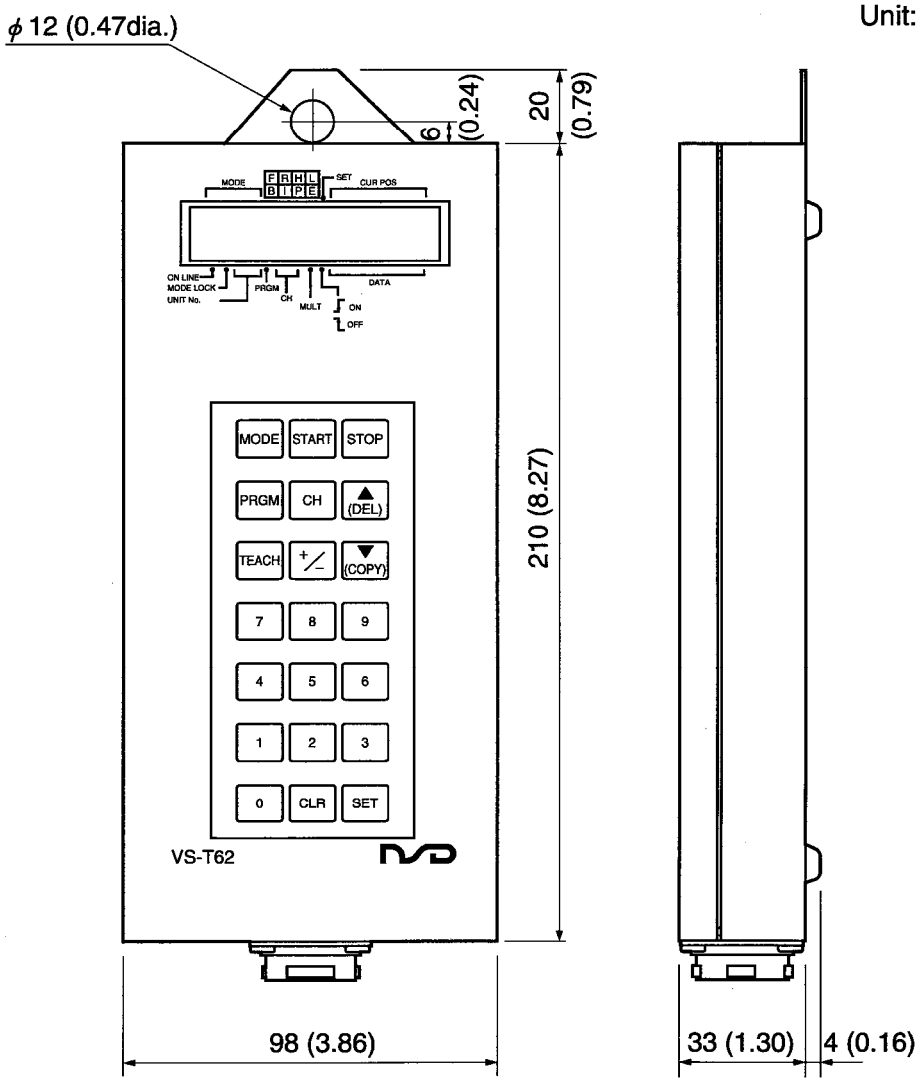

APPX

1.3.3 Cable for external setting unit dimensions (VS-C1S62-2)

Unit: mm (in.)

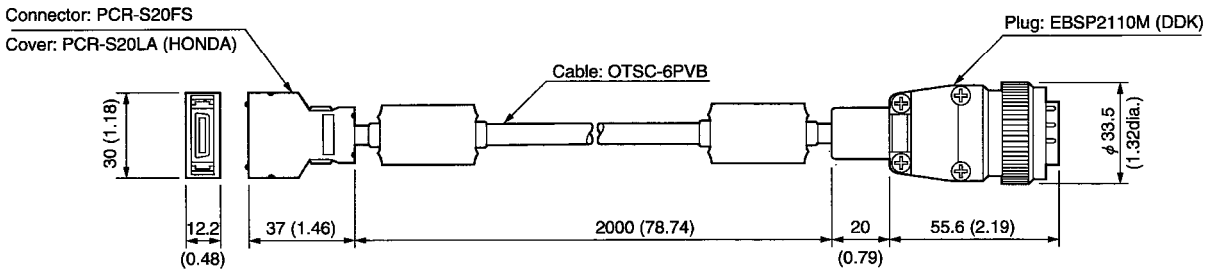

1.4 Contacts for Inquiries and Orders

For inquiries and orders of the A1S62LS, external setting unit (VS-T62), external setting unit cable (VS-C1S62-2), and ABSOCODER sensor and sensor cables, please refer to the contact below.

NSD corporation

3-31-28 Osu, Naka-ku, Nagoya 460 Japan

Phone 052-261-2352

2. DIMENSIONS

2.1 A1S62LS Position Detection Module

Unit: mm (in.)

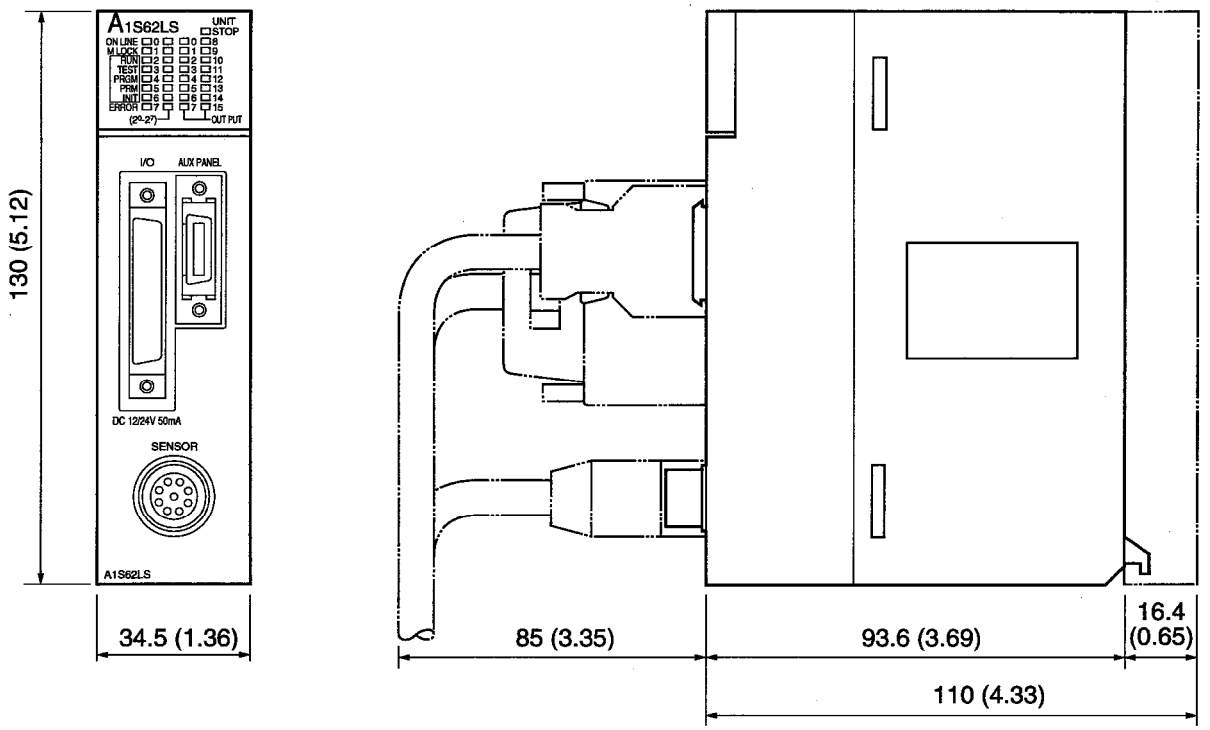

3. A1S62LS INPUT/OUTPUT SIGNALS FOR EACH MODE AND BUFFER MEMORY FUNCTION LIST

○: Input/output enabled ×: Input/output disabled

Signal Type	Signal No. & Name (A1S62LS Mode (Manual Mode))		RUN Mode		TEST Mode	PRGM Mode	PRM Mode	INIT Mode	Remarks
			Online	Offline					
Signal inputs to PC CPU	X0	Watchdog timer error	○	○	○	○	○	○	
	X1	A1S62LS operation status (online/offline)	ON	OFF	OFF	OFF	OFF	OFF	This signal turns ON (online) when Y10 is turned ON in RUN mode.
	X2	'Upper-limit overtravel' detection	○	×	×	×	×	×	
	X3	'Lower-limit overtravel' detection	○	×	×	×	×	×	
	X4	'Sensor error' detection	○	○	○	○	○	○	
	X5	'Excessive correction amount' detection	○	×	○	×	×	×	
	X6	'Excessive current position change' detection	○	○	○	○	○	○	
	X7	Error detection	○	○	○	○	○	○	
	X8 - XF	CHs. 0 - 7 for Limit SW output function only CHs. 8 - 15 for Limit SW output & Positioning functions	○	○	○	○	○	○	Equivalent to external output
Signal outputs from PC CPU	Y10	'PC ready' signal	ON	OFF	×	×	×	×	Online/offline status is designated by this signal when in the RUN mode.
	Y11	'Positioning START' signal	○	×	×	×	×	×	Detected at leading edge
	Y12	'Positioning STOP' signal	○	×	×	×	×	×	Detected at leading edge
	Y13	FWD JOG signal	○	×	×	×	×	×	
	Y14	RVS JOG signal	○	×	×	×	×	×	
	Y15	'Limit SW output enabled' signal	○	×	×	×	×	×	
	Y16	'Error reset' signal	○	○	○	○	○	○	
	Y17	'Current position preset 1 disabled' signal/Current position preset command (leading edge detection)	○	×	○	×	×	×	
	Y18	'Current position preset 2 disabled' signal	○	×	○	×	×	×	
	Y19	Mode lock signal	○	○	×	×	×	×	
Buffer memory	Address: 0 & 1	Current position value (scaling binary)	○	○	○	○	○	○	
	2 & 3	Current position value (sensor binary)	○	○	○	○	○	○	
	4	All-channel output status	○	○	○	○	○	○	Equivalent to an external output
	5	Program No. answerback	○	×	×	×	×	×	
	6	Manual mode	○	○	○	○	○	○	
	7	Error code	○	○	○	○	○	○	
	8	'Limit SW output disabled' setting	○	×	×	×	×	×	
	9	Program No. setting	○	×	×	×	×	×	
	10 & 11	Target stop position setting data	○	×	×	×	×	×	
	12 - 667	CHs. 0 - 15: limit SW ON/OFF position settings	○	×	×	○	×	×	Effective only for program No. 0 copy operation in PRGM mode.
	668 & 669	Speed output	○	○	○	○	○	○	
	670 & 671	Hold current position (scaling binary)	○	×	○	×	×	×	
	672 & 673	Hold current position (sensor binary)	○	×	○	×	×	×	
	674 & 675	FWD stop zone after learning	○	×	○	×	×	×	
	676 & 677	RVS stop zone after learning	○	×	○	×	×	×	

APPX

Signal Type	Signal No. & Name (A1S62LS Mode (Manual Mode))		RUN Mode: Online	RUN Mode: Offline	TEST Mode	PRGM Mode	PRM Mode	INIT Mode	Remarks
Buffer memory	Address: 678	Speed limit	○	×	○	×	×	×	
	679	Positioning parameter buffer memory selection	○	×	○	×	×	×	
	680 & 681	Medium-speed zone	○	×	○	×	×	×	
	682 & 683	Low-speed zone	○	×	○	×	×	×	
	684 & 685	FWD stop zone	○	×	○	×	×	×	
	686 & 687	RVS stop zone	○	×	○	×	×	×	
	688 & 689	In-position zone	○	×	○	×	×	×	
	690 & 691	Current position preset input 1	○	×	○	×	×	×	
	692 & 693	Current position preset input 2	○	×	○	×	×	×	
	694	A1S62LS display No.	○	○	○	○	○	○	
	700	Sequence mode selection	○	×	○	×	×	×	
	701	Sequence mode answerback	○	×	○	×	×	×	
	702	Sensor selection/sensor rotation direction	○	○	○	×	×	○	
	703	Decimal point position	○	○	○	×	×	○	
	704 & 705	Scale length	○	○	○	×	×	○	
	707 & 708	Minimum current position value	○	○	○	×	×	○	
	709 & 710	Current position value	○	○	○	×	×	○	
	711	Function	○	○	○	×	○	×	
	712	Positioning format	○	○	○	×	○	×	
	713	Positioning direction	○	○	○	×	○	×	
	714 & 715	Overshoot amount	○	○	○	×	○	×	
	716 & 717	Medium-speed zone	○	○	○	×	○	×	
	718 & 719	Low-speed zone	○	○	○	×	○	×	
	720 & 721	Stop zone	○	○	○	×	○	×	
	722 & 723	In-position zone	○	○	○	×	○	×	
	724 & 725	Upper limit value	○	○	○	×	○	×	
	726 & 727	Lower limit value	○	○	○	×	○	×	
	728	Start from stop zone	○	○	○	×	○	×	
	729	Motion non-detection timer	○	○	○	×	○	×	
	730	Motion misdirection non-detection timer	○	○	○	×	○	×	
	731	Positioning end detection timer	○	○	○	×	○	×	
	732	JOG low-speed timer	○	○	○	×	○	×	
	733	No. of protected channels	○	○	○	×	○	×	
	734	Offline channel output status (other than RUN mode)	○	○	○	×	○	×	
	735	Offline channel output status (RUN mode)	○	○	○	×	○	×	
	736 & 737	Permissible current position change amount	○	○	○	×	○	×	
	738 & 739	Permissible correction amount	○	○	○	×	○	×	
	740	Current position preset function	○	○	○	×	○	×	
	741 & 742	FWD current position preset value 1	○	○	○	×	○	×	
	743 & 744	RVS current position preset value 1	○	○	○	×	○	×	
	745 & 746	FWD current position preset value 2	○	○	○	×	○	×	
	747 & 748	RVS current position preset value 2	○	○	○	×	○	×	
	749	Speed gate time	○	○	○	×	○	×	
	750	Speed sampling time	○	○	○	×	○	×	

Signal Type	A1S62LS Mode (Manual Mode) / Pin No. & Name		RUN Mode		TEST Mode	PRGM Mode	PRM Mode	INIT Mode	Remarks
			Online	Offline					
External outputs	B12 - A5	CH. 0 - CH. 15	○	○	○	○	○	○	When any of offline, TEST, PRGM, PRM, or INIT mode is selected, limit SW output status is according to the parameter settings. When any of offline, TEST, PRGM, PRM, or INIT mode is selected, positioning control outputs will be turned OFF.
External inputs	B4	'Current position preset input 1'	○	×	○	×	×	×	
	B3	'Current position preset input 2'	○	×	○	×	×	×	

4. A1S62LS DATA SHEET

4.1 A1S62LS Initial Setting and Parameter Setting Sheet

Initial Setting									
No.	Address	Item	Default Value	Setting Value	No.	Address	Item	Default Value	Setting Value
90	702	Sensor selection/ sensor lotation direction 0→MRE-32SP062 CW 1→MRE-32SP062 CCW 2→MRE-G□SP062 CW 3→MRE-G□SP062 CCW (* viewed from shaft direction)	0		92	704 705	Scale length (L) [1000 - 999999]	131072	
					93	707 708	Minimum current position value (K) [-99999 - 999999]	0	
91	703	Decimal point position [0 - 5]	0		94	709 710	Current position value [K to (K+ L-1)]	65536	

APPX

Parameter									
No.	Address	Item	Default Value	Setting Value	No.	Address	Item	Default Value	Setting Value
50	711	Function 0: Limit SW output function & positioning function 1: Limit SW output function only 2: Current position detection function only	2		66	734	Offline output status channel output status (excluding RUN mode) Mode/Data: 0 = All-points OFF / All-points OFF; 1 = HOLD / HOLD; 2 = All-points OFF → limit SW output / All-points OFF; 3 = HOLD → limit SW output / HOLD (TEST Mode / INIT, PRM, PRGM Modes)	0	
51	712	Positioning format 0: Speed switching format: w/o learning function 1: Speed stepping format: w/o learning function 2: Speed switching format: w/ learning function 3: Speed stepping format: w/ learning function	0						
52	713	Positioning direction 0: FWD direction 1: RVS direction	0						
53	714 715	Overshoot amount [0 - 999999]	100		67	735	Offline output status channel output status (for RUN mode) [0: All-points OFF 1: HOLD]	0	
54	716 717	Medium-speed zone [0 - 999999]	10000		68	736 737	Permissible current position change amount [0 - 999999]	999999	
55	718 719	Low-speed zone [0 - 999999]	1000		69	738 739	Permissible correction amount [0 - 999999]	999999	
56	720 721	Stop zone [0 - 999999]	100		70	740	Current position preset function 0: INVALD 1: By Parameter 2: By Buffer memory 3: By Sequence	0	
57	721 723	In-position zone [0 - 999999]	100		71	741 742	'FWD current position preset 1' value [K to (K + L -1)].	0	
58	724 725	Upper-limit [-99999 - 999999]	999999		72	743 744	'RVS current position preset 1' value [K to (K + L -1)].	0	
59	726 727	Lower-limit [-99999 - 999999]	-99999		73	745 746	'FWD current position preset 2' value [K to (K + L -1)].	0	
60	728	START from stop zone [0: Disable 1: Enable]	1		74	747 748	'RVS current position preset 2' value [K to (K + L -1)].	0	
61	729	Motion non-detection timer [0.00 - 99.99] (sec)	10.00		75	749	Speed gate time 0: 4 ms 1: 8 ms 2: 16 ms 3: 32 ms 4: 64 ms 5: Rotation speed (rpm)	0	
62	730	Motion misdirection non-detection timer [0.00 - 99.99] (sec)	10.00						
63	731	'Positioning end' detection timer [0.00 - 99.99] (sec)	0.1		76	750	Speed sampling time 0: Same as speed gate time 1: 1/2 of speed gate time 2: 1/4 of speed gate time	0	
64	732	JOG low-speed timer [0.00 - 99.99] (sec)	99.99						
65	733	Number of protected channels [0 - 16]	0						

APPX

4.2 A1S62LS Data Sheet

4.2.1 A1S62LS data sheet CH. 0 - CH. 3

NAME								
Item	CH.0		CH.1		CH.2		CH.3	
	Address	Setting value	Address	Setting value	Address	Setting value	Address	Setting value
Number of Multi-dogs	12		53		94		135	
Dog No.0 ON	13 (L)		54 (L)		95 (L)		136 (L)	
	14 (H)		55 (H)		96 (H)		137 (H)	
Dog No.0 OFF	15 (L)		56 (L)		97 (L)		138 (L)	
	16 (H)		57 (H)		98 (H)		139 (H)	
Dog No.1 ON	17 (L)		58 (L)		99 (L)		140 (L)	
	18 (H)		59 (H)		100 (H)		141 (H)	
Dog No.1 OFF	19 (L)		60 (L)		101 (L)		142 (L)	
	20 (H)		61 (H)		102 (H)		143 (H)	
Dog No.2 ON	21 (L)		62 (L)		103 (L)		144 (L)	
	22 (H)		63 (H)		104 (H)		145 (H)	
Dog No.2 OFF	23 (L)		64 (L)		105 (L)		146 (L)	
	24 (H)		65 (H)		106 (H)		147 (H)	
Dog No.3 ON	25 (L)		66 (L)		107 (L)		148 (L)	
	26 (H)		67 (H)		108 (H)		149 (H)	
Dog No.3 OFF	27 (L)		68 (L)		109 (L)		150 (L)	
	28 (H)		69 (H)		110 (H)		151 (H)	
Dog No.4 ON	29 (L)		70 (L)		111 (L)		152 (L)	
	30 (H)		71 (H)		112 (H)		153 (H)	
Dog No.4 OFF	31 (L)		72 (L)		113 (L)		154 (L)	
	32 (H)		73 (H)		114 (H)		155 (H)	
Dog No.5 ON	33 (L)		74 (L)		115 (L)		156 (L)	
	34 (H)		75 (H)		116 (H)		157 (H)	
Dog No.5 OFF	35 (L)		76 (L)		117 (L)		158 (L)	
	36 (H)		77 (H)		118 (H)		159 (H)	
Dog No.6 ON	37 (L)		78 (L)		119 (L)		160 (L)	
	38 (H)		79 (H)		120 (H)		161 (H)	
Dog No.6 OFF	39 (L)		80 (L)		121 (L)		162 (L)	
	40 (H)		81 (H)		122 (H)		163 (H)	
Dog No.7 ON	41 (L)		82 (L)		123 (L)		164 (L)	
	42 (H)		83 (H)		124 (H)		165 (H)	
Dog No.7 OFF	43 (L)		84 (L)		125 (L)		166 (L)	
	44 (H)		85 (H)		126 (H)		167 (H)	
Dog No.8 ON	45 (L)		86 (L)		127 (L)		168 (L)	
	46 (H)		87 (H)		128 (H)		169 (H)	
Dog No.8 OFF	47 (L)		88 (L)		129 (L)		170 (L)	
	48 (H)		89 (H)		130 (H)		171 (H)	
Dog No.9 ON	49 (L)		90 (L)		131 (L)		172 (L)	
	50 (H)		91 (H)		132 (H)		173 (H)	
Dog No.9 OFF	51 (L)		92 (L)		133 (L)		174 (L)	
	52 (H)		93 (H)		134 (H)		175 (H)	

4.2.2 A1S62LS data sheet CH. 4 - CH. 7

NAME								
Item	CH.4		CH.5		CH.6		CH.7	
	Address	Setting value	Address	Setting value	Address	Setting value	Address	Setting value
Number of Multi-dogs	176		217		258		299	
Dog No.0 ON	177 (L)		218 (L)		259 (L)		300 (L)	
	178 (H)		219 (H)		260 (H)		301 (H)	
Dog No.0 OFF	179 (L)		220 (L)		261 (L)		302 (L)	
	180 (H)		221 (H)		262 (H)		303 (H)	
Dog No.1 ON	181 (L)		222 (L)		263 (L)		304 (L)	
	182 (H)		223 (H)		264 (H)		305 (H)	
Dog No.1 OFF	183 (L)		224 (L)		265 (L)		306 (L)	
	184 (H)		225 (H)		266 (H)		307 (H)	
Dog No.2 ON	185 (L)		226 (L)		267 (L)		308 (L)	
	186 (H)		227 (H)		268 (H)		309 (H)	
Dog No.2 OFF	187 (L)		228 (L)		269 (L)		310 (L)	
	188 (H)		229 (H)		270 (H)		311 (H)	
Dog No.3 ON	189 (L)		230 (L)		271 (L)		312 (L)	
	190 (H)		231 (H)		272 (H)		313 (H)	
Dog No.3 OFF	191 (L)		232 (L)		273 (L)		314 (L)	
	192 (H)		233 (H)		274 (H)		315 (H)	
Dog No.4 ON	193 (L)		234 (L)		275 (L)		316 (L)	
	194 (H)		235 (H)		276 (H)		317 (H)	
Dog No.4 OFF	195 (L)		236 (L)		277 (L)		318 (L)	
	196 (H)		237 (H)		278 (H)		319 (H)	
Dog No.5 ON	197 (L)		238 (L)		279 (L)		320 (L)	
	198 (H)		239 (H)		280 (H)		321 (H)	
Dog No.5 OFF	199 (L)		240 (L)		281 (L)		322 (L)	
	200 (H)		241 (H)		282 (H)		323 (H)	
Dog No.6 ON	201 (L)		242 (L)		283 (L)		324 (L)	
	202 (H)		243 (H)		284 (H)		325 (H)	
Dog No.6 OFF	203 (L)		244 (L)		285 (L)		326 (L)	
	204 (H)		245 (H)		286 (H)		327 (H)	
Dog No.7 ON	205 (L)		246 (L)		287 (L)		328 (L)	
	206 (H)		247 (H)		288 (H)		329 (H)	
Dog No.7 OFF	207 (L)		248 (L)		289 (L)		330 (L)	
	208 (H)		249 (H)		290 (H)		331 (H)	
Dog No.8 ON	209 (L)		250 (L)		291 (L)		332 (L)	
	210 (H)		251 (H)		292 (H)		333 (H)	
Dog No.8 OFF	211 (L)		252 (L)		293 (L)		334 (L)	
	212 (H)		253 (H)		294 (H)		335 (H)	
Dog No.9 ON	213 (L)		254 (L)		295 (L)		336 (L)	
	214 (H)		255 (H)		296 (H)		337 (H)	
Dog No.9 OFF	215 (L)		256 (L)		297 (L)		338 (L)	
	216 (H)		257 (H)		298 (H)		339 (H)	

4.2.3 A1S62LS data sheet CH. 8 - CH. 11

NAME								
Item	CH.8		CH.9		CH.10		CH.11	
	Address	Setting value	Address	Setting value	Address	Setting value	Address	Setting value
Number of Multi-dogs	340		381		422		463	
Dog No.0 ON	341 (L)		382 (L)		423 (L)		464 (L)	
	342 (H)		383 (H)		424 (H)		465 (H)	
Dog No.0 OFF	343 (L)		384 (L)		425 (L)		466 (L)	
	344 (H)		385 (H)		426 (H)		467 (H)	
Dog No.1 ON	345 (L)		386 (L)		427 (L)		468 (L)	
	346 (H)		387 (H)		428 (H)		469 (H)	
Dog No.1 OFF	347 (L)		388 (L)		429 (L)		470 (L)	
	348 (H)		389 (H)		430 (H)		471 (H)	
Dog No.2 ON	349 (L)		390 (L)		431 (L)		472 (L)	
	350 (H)		391 (H)		432 (H)		473 (H)	
Dog No.2 OFF	351 (L)		392 (L)		433 (L)		474 (L)	
	352 (H)		393 (H)		434 (H)		475 (H)	
Dog No.3 ON	353 (L)		394 (L)		435 (L)		476 (L)	
	354 (H)		395 (H)		436 (H)		477 (H)	
Dog No.3 OFF	355 (L)		396 (L)		437 (L)		478 (L)	
	356 (H)		397 (H)		438 (H)		479 (H)	
Dog No.4 ON	357 (L)		398 (L)		439 (L)		480 (L)	
	358 (H)		399 (H)		440 (H)		481 (H)	
Dog No.4 OFF	359 (L)		400 (L)		441 (L)		482 (L)	
	360 (H)		401 (H)		442 (H)		483 (H)	
Dog No.5 ON	361 (L)		402 (L)		443 (L)		484 (L)	
	362 (H)		403 (H)		444 (H)		485 (H)	
Dog No.5 OFF	363 (L)		404 (L)		445 (L)		486 (L)	
	364 (H)		405 (H)		446 (H)		487 (H)	
Dog No.6 ON	365 (L)		406 (L)		447 (L)		488 (L)	
	366 (H)		407 (H)		448 (H)		489 (H)	
Dog No.6 OFF	367 (L)		408 (L)		449 (L)		490 (L)	
	368 (H)		409 (H)		450 (H)		491 (H)	
Dog No.7 ON	369 (L)		410 (L)		451 (L)		492 (L)	
	370 (H)		411 (H)		452 (H)		493 (H)	
Dog No.7 OFF	371 (L)		412 (L)		453 (L)		494 (L)	
	372 (H)		413 (H)		454 (H)		495 (H)	
Dog No.8 ON	373 (L)		414 (L)		455 (L)		496 (L)	
	374 (H)		415 (H)		456 (H)		497 (H)	
Dog No.8 OFF	375 (L)		416 (L)		457 (L)		498 (L)	
	376 (H)		417 (H)		458 (H)		499 (H)	
Dog No.9 ON	377 (L)		418 (L)		459 (L)		500 (L)	
	378 (H)		419 (H)		460 (H)		501 (H)	
Dog No.9 OFF	379 (L)		420 (L)		461 (L)		502 (L)	
	380 (H)		421 (H)		462 (H)		503 (H)	

4.2.4 A1S62LS data sheet CH. 12 - CH. 15

NAME								
Item	CH.12		CH.13		CH.14		CH.15	
	Address	Setting value	Address	Setting value	Address	Setting value	Address	Setting value
Number of Multi-dogs	504		545		586		627	
Dog No.0 ON	505 (L)		546 (L)		587 (L)		628 (L)	
	506 (H)		547 (H)		588 (H)		629 (H)	
Dog No.0 OFF	507 (L)		548 (L)		589 (L)		630 (L)	
	508 (H)		549 (H)		590 (H)		631 (H)	
Dog No.1 ON	509 (L)		550 (L)		591 (L)		632 (L)	
	510 (H)		551 (H)		592 (H)		633 (H)	
Dog No.1 OFF	511 (L)		552 (L)		593 (L)		634 (L)	
	512 (H)		553 (H)		594 (H)		635 (H)	
Dog No.2 ON	513 (L)		554 (L)		595 (L)		636 (L)	
	514 (H)		555 (H)		596 (H)		637 (H)	
Dog No.2 OFF	515 (L)		556 (L)		597 (L)		638 (L)	
	516 (H)		557 (H)		598 (H)		639 (H)	
Dog No.3 ON	517 (L)		558 (L)		599 (L)		640 (L)	
	518 (H)		559 (H)		600 (H)		641 (H)	
Dog No.3 OFF	519 (L)		560 (L)		601 (L)		642 (L)	
	520 (H)		561 (H)		602 (H)		643 (H)	
Dog No.4 ON	521 (L)		562 (L)		603 (L)		644 (L)	
	522 (H)		563 (H)		604 (H)		645 (H)	
Dog No.4 OFF	523 (L)		564 (L)		605 (L)		646 (L)	
	524 (H)		565 (H)		606 (H)		647 (H)	
Dog No.5 ON	525 (L)		566 (L)		607 (L)		648 (L)	
	526 (H)		567 (H)		608 (H)		649 (H)	
Dog No.5 OFF	527 (L)		568 (L)		609 (L)		650 (L)	
	528 (H)		569 (H)		610 (H)		651 (H)	
Dog No.6 ON	529 (L)		570 (L)		611 (L)		652 (L)	
	530 (H)		571 (H)		612 (H)		653 (H)	
Dog No.6 OFF	531 (L)		572 (L)		613 (L)		654 (L)	
	532 (H)		573 (H)		614 (H)		655 (H)	
Dog No.7 ON	533 (L)		574 (L)		615 (L)		656 (L)	
	534 (H)		575 (H)		616 (H)		657 (H)	
Dog No.7 OFF	535 (L)		576 (L)		617 (L)		658 (L)	
	536 (H)		577 (H)		618 (H)		659 (H)	
Dog No.8 ON	537 (L)		578 (L)		619 (L)		660 (L)	
	538 (H)		579 (H)		620 (H)		661 (H)	
Dog No.8 OFF	539 (L)		580 (L)		621 (L)		662 (L)	
	540 (H)		581 (H)		622 (H)		663 (H)	
Dog No.9 ON	541 (L)		582 (L)		623 (L)		664 (L)	
	542 (H)		583 (H)		624 (H)		665 (H)	
Dog No.9 OFF	543 (L)		584 (L)		625 (L)		666 (L)	
	544 (H)		585 (H)		626 (H)		667 (H)	

WARRANTY

Please confirm the following product warranty details before starting use.

1. Gratis Warranty Term and Gratis Warranty Range

If any faults or defects (hereinafter "Failure") found to be the responsibility of Mitsubishi occurs during use of the product within the gratis warranty term, the product shall be repaired at no cost via the dealer or Mitsubishi Service Company. Note that if repairs are required at a site overseas, on a detached island or remote place, expenses to dispatch an engineer shall be charged for.

[Gratis Warranty Term]

The gratis warranty term of the product shall be for one year after the date of purchase or delivery to a designated place.

Note that after manufacture and shipment from Mitsubishi, the maximum distribution period shall be six (6) months, and the longest gratis warranty term after manufacturing shall be eighteen (18) months. The gratis warranty term of repair parts shall not exceed the gratis warranty term before repairs.

[Gratis Warranty Range]

(1) The range shall be limited to normal use within the usage state, usage methods and usage environment, etc., which follow the conditions and precautions, etc., given in the instruction manual, user's manual and caution labels on the product.

(2) Even within the gratis warranty term, repairs shall be charged for in the following cases.

1. Failure occurring from inappropriate storage or handling, carelessness or negligence by the user. Failure caused by the user's hardware or software design.
2. Failure caused by unapproved modifications, etc., to the product by the user.
3. When the Mitsubishi product is assembled into a user's device, Failure that could have been avoided if functions or structures, judged as necessary in the legal safety measures the user's device is subject to or as necessary by industry standards, had been provided.
4. Failure that could have been avoided if consumable parts (battery, backlight, fuse, etc.) designated in the instruction manual had been correctly serviced or replaced.
5. Failure caused by external irresistible forces such as fires or abnormal voltages, and Failure caused by force majeure such as earthquakes, lightning, wind and water damage.
6. Failure caused by reasons unpredictable by scientific technology standards at time of shipment from Mitsubishi.
7. Any other failure found not to be the responsibility of Mitsubishi or the user.

2. Onerous repair term after discontinuation of production

(1) Mitsubishi shall accept onerous product repairs for seven (7) years after production of the product is discontinued. Discontinuation of production shall be notified with Mitsubishi Technical Bulletins, etc.

(2) Product supply (including repair parts) is not possible after production is discontinued.

3. Overseas service

Overseas, repairs shall be accepted by Mitsubishi's local overseas FA Center. Note that the repair conditions at each FA Center may differ.

4. Exclusion of chance loss and secondary loss from warranty liability

Regardless of the gratis warranty term, Mitsubishi shall not be liable for compensation to damages caused by any cause found not to be the responsibility of Mitsubishi, chance losses, lost profits incurred to the user by Failures of Mitsubishi products, damages and secondary damages caused from special reasons regardless of Mitsubishi's expectations, compensation for accidents, and compensation for damages to products other than Mitsubishi products and other duties.

5. Changes in product specifications

The specifications given in the catalogs, manuals or technical documents are subject to change without prior notice.

6. Product application

(1) In using the Mitsubishi MELSEC programmable logic controller, the usage conditions shall be that the application will not lead to a major accident even if any problem or fault should occur in the programmable logic controller device, and that backup and fail-safe functions are systematically provided outside of the device for any problem or fault.

(2) The Mitsubishi general-purpose programmable logic controller has been designed and manufactured for applications in general industries, etc. Thus, applications in which the public could be affected such as in nuclear power plants and other power plants operated by respective power companies, and applications in which a special quality assurance system is required, such as for Railway companies or National Defense purposes shall be excluded from the programmable logic controller applications.

Note that even with these applications, if the user approves that the application is to be limited and a special quality is not required, application shall be possible.

When considering use in aircraft, medical applications, railways, incineration and fuel devices, manned transport devices, equipment for recreation and amusement, and safety devices, in which human life or assets could be greatly affected and for which a particularly high reliability is required in terms of safety and control system, please consult with Mitsubishi and discuss the required specifications.

Type A1S62LS

User's Manual

MODEL	A1S62LS-U-E
MODEL CODE	13J837
IB(NA)-66647-B(0312)MEE	

MITSUBISHI ELECTRIC CORPORATION

HEAD OFFICE : 1-8-12, OFFICE TOWER Z 14F HARUMI CHUO-KU 104-6212,JAPAN
NAGOYA WORKS : 1-14 , YADA-MINAMI 5-CHOME , HIGASHI-KU, NAGOYA , JAPAN

When exported from Japan, this manual does not require application to the Ministry of Economy, Trade and Industry for service transaction permission.

Specifications subject to change without notice.